BJC-4300

USER MANUAL

Canon

Contents

1 Introduction 1-1

Supplies and Accessories 1-2

BJ Cartridges and BJ Tanks 1-2
Canon Specialty Papers 1-4
Color Image Scanner Cartridge 1-4

Getting Help From Canon 1-5

Servicing the Printer 1-6

2 Using the Printer With Windows 2-1

Installing a Printer Driver 2-1
Printing a Document 2-2
Printer Setup Within Windows 95 2-3

Opening the Printer Properties Dialog Box in Windows 95 2-3
Using the Printer Driver in Windows 95 2-3

Printer Setup Within Windows 3.1 2-4

Accessing the Printer Options 2-4

The Windows Tabs 2-5

Specifying Your Printing Options 2-8
Recommended Graphics Settings 2-8
Using the Setup Analyzer 2-10
Using Cartridge Detection 2-11

Printing Speed Versus Color 2-12

For Quick Color Printing 2-12
For High Quality Color Printing 2-12
For Monochrome Printing 2-13
Other Ways to Improve Printing 2-13

3 Paper Handling 3-1

Selecting Paper Types 3-2

Paper Guidelines 3-4

Setting the Paper Thickness Lever 3-5
Printer Settings for Various Print Media 3-6
Loading Paper 3-7

Automatically Feeding Paper 3-7
Auto Feed Guidelines 3-10
Manually Feeding Paper 3-12

Printing on Envelopes 3-14
Using Canon's Specialty Papers 3-17

Specialty Paper Guidelines 3-17
High Resolution Paper HR-101 3-19
Fabric Sheet FS-101 3-22
Printing on Banner Paper 3-24

4 Maintaining the Printer 4-1
Printer Guidelines 4-2
Cleaning the Printer 4-3
Printing the Test Pages 4-4
Printing the Test Page From Windows 4-5
Printing the Test Pages Using the Operators Panel 4-6
Cleaning the Print Head 4-6
Cleaning the Print Head From Windows 4-6
Cleaning the Print Head Using the Operators Panel 4-7
BJ Cartridge Guidelines 4-8
BJ Cartridge and BJ Tank Maintenance 4-10
Replacing the BJ Cartridge 4-11
Replacing a BJ Tank in the BC-21e Color BJ Cartridge 4-18
Storing a BJ Cartridge 4-22
Installing and Removing the Optional Color Scanner Cartridge 4-24
Installing the Color Image Scanner Cartridge 4-24
Removing the Color Image Scanner Cartridge 4-27
Transporting the Printer 4-28
5 Troubleshooting 5-1
Identifying Your Printer Problem 5-2
General Problems 5-3
Clearing Paper Jams 5-4
Technical Notes 5-5
Appendix A Specifications A-1
Printing Specifications A-1
BJ Cartridges A-4
General A-5
Optional IS-22 Color Image Scanner Cartridge A-5
Glossary G-1
Index I-1
FCC Regulations FCC-1

Introduction

Congratulations on your purchase of the Canon BJC-4300 Series Color Bubble Jet™ Printer. We appreciate your choosing this printer to meet your printing needs.

The BJC-4300 Series printers offer excellent print quality and fast print speed using both color and black inks. We are certain you will be satisfied with this advanced Bubble Jet technology.

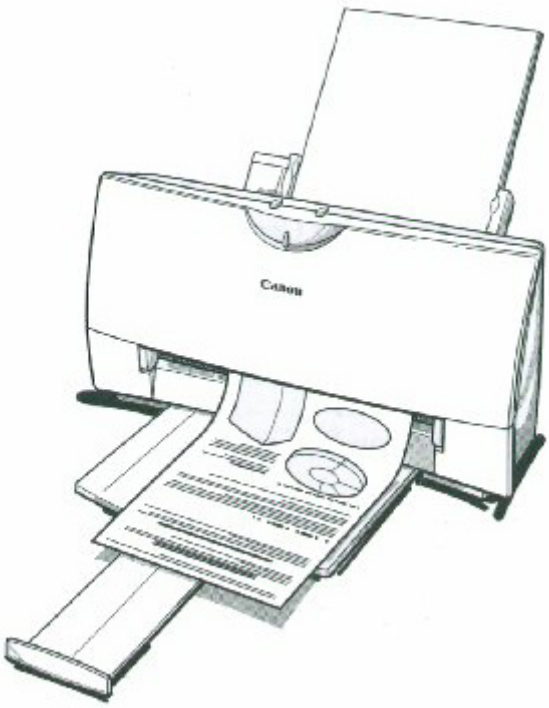

This chapter:

- Lists the supplies, accessories, and options you can purchase for the printer
- Describe Canon's customer support services

Supplies and Accessories

Your BJC-4300 Series printer supports excellent and unique print media options that will allow you to produce dazzling, professional, and fun presentations. All of these print media are specially designed and manufactured to work with your Canon color printer so you can produce the finest output possible.

Canon has an extensive dealer network equipped to offer you supplies as you need them. to find a dealer near you, call the Canon Referral Service at 1-800-848-4123.

If supplies are not available from your local dealer, you can order directly from Canon by calling
1-800-671-1090

BJ Cartridge and BJ Tanks

You can use the following BJ cartridges with the BJC-4300 printers:

- BC-21e Color BJ Cartridge
- BC-20 Black BJ Cartridge
- BC-22e Photo BJ Cartridge
- BC-29F Neon BJ Cartridge

You can purchase the following BJ tanks for use in the BC-21e Color BJ Cartridge:

- BCI-21 Black BJ Tank
- BCI-21 Color BJ Tank

BJ cartridges contain the Bubble Jet print head and BJ tank(s), while BJ tanks contain ink only.

Canon has more engineers dedicated to creating quality ink for providing the best results for output on Bubble Jet printers than any other organization. Canon does not prohibit the use of third-party inks and the use of third-party inks does not invalidate the product's limited warranty. However, Canon cannot guarantee the quality or performance of your printer when you are using inks from other suppliers.

Canon's limited warranty does not cover damage caused to Canon's Bubble Jet products that is attributable to the use of third party parts or supplies, including inks. The limited warranty remains in effect for its life once that particular damage has been properly repaired.

For optimum printing results, Canon recommends that you use only Canon BJ cartridges and BJ tanks.

You can also purchase the optional Canon BC-22e Photo Kit, Which Includes everything you need to produce photo-realistic images:

- BC-22e Photo BJ Cartridge
- SB-21 Ink Cartridge Storage Box
- Canon High Resolution Paper HR-101 (60 Sheets)

See Chapter 4, *Maintaining the Printer*, for details on replacing BJ cartridges.

Canon Specialty Papers

Canon manufactures numerous specialty papers, including:

- Glossy Photo Paper GP-201
- Banner Paper
- High Resolution Paper HR-101
- T-Shirt Transfers TR-101
- Greeting Cards GC-101
- Bubble Jet Paper LC-301 (water resistant)
- Fabric Sheets FS-101
- CF-102 Transparencies
- Back Print Film BF-102
- High Gloss Film HG-101

See Chapter 3, *Paper Handling*, for details on Canon's Specialty Papers.

Color Image Scanner Cartridge

You can use your BJC-4300 Series printer as a color image sheetfed scanner by removing the BJ cartridge from the printer and replacing it with the optional IS-22 Color Image Scanner Cartridge. This scanner cartridge employs an optical head in place of a print head to scan images and text on paper fed through the printer. Installation of the scanner cartridge is described later in this manual. For details about using the scanner cartridge, see the *IS-22 Color Image Scanner Cartridge User's Manual* that comes with the cartridge package.

See Chapter 4, *Maintaining the Printer*, for instructions on how to install the scanner cartridge.

Getting Help From Canon

Canon Computer Systems, Inc. offers a full range of customer technical support options including*:

- 24-hour, 7-day-a-week, toll free automated support for troubleshooting issues on most current products (**1-800-423-2366**)
- Speak to a technician free of service charge (currently Monday through Friday, 8:00 a.m. to 10:00 p.m. EST and Saturday, 12:00 p.m. to 6:00 p.m. EST, excluding holidays)for products still under warranty** (**1-757-413-2848**)
- Speak to a technician (currently $24.99) during holidays and days/hours not listed above regarding urgent product questions or for products no longer under warranty (**1-800-423-2366**)
- E-mail support via the Canon Computer Systems, Inc. Web site (**www.ccsi.canon.com**)
- 24-hour, toll-free Fax Retrieval System (**1-800-526-4345**)
- 24-hour Bulletin Board Service (**1-757-420-2000**)

*Support program specifies subject to change without notice.
**Refer to individual product information for warranty details.

Canon Canada
Customer support for Canadian residents is available 24 hours a day (seven days a week) at **1-800-263-1121**

In other countries contact your Canon Dealer.

Servicing the Printer

The Canon BJC-4300 Series Color Bubble Jet Printers are designed with the latest technology to provide trouble-free operation. The Warranty Card that comes with the printer describes Canon's one-year limited warranty for your Bubble Jet printer. Be sure to read the warranty information to find out about the different service options available to you.

Save your sales receipt for proof of purchase. In the event that your printer needs service, you will need your proof of purchase to obtain warranty service.

If you feel your BJC-4300 Series Color Bubble Jet Printer needs servicing, contact Canon on the World Wide Web to locate the Canon Authorized Service Facility (ASF) nearest you. If you do not have access to the Web, you can call Canon (see page 1-5).

Using the Printer With Windows 2

This chapter describes how to use the printer with your Windows applications. It includes:

- Installing a printer driver
- Printing a document
- Printer setup within Windows 95
- Printer setup within Windows 3.1
- The Windows tabs
- Printing speed versus color

Installing a Printer Driver

Before you can use any type of printer with your computer, you must install a printer driver. The printer driver tells the computer what kind of a printer you are using. The printer driver also controls the various settings, such as print quality and paper type. You define these settings within the printer driver then communicates the settings to both the computer and the printer

You must install the BJC-4300 Printer Driver for Windows before you can use the printer with your computer. See your *Quick Start Guide* for instructions.

Printing a Document

This procedure describes the general steps required for printing from various Windows applications. The exact steps for printing a document may vary depending on the application program you are using. Refer to your software application's documentation for the exact printing procedure.

1

Start your application.

- Start the program you are using to create the documentation and open the document you want to print.

2

Make sure the Canon BJC-4300 is selected as your default printer.

- Choose Print Setup from the File menu.

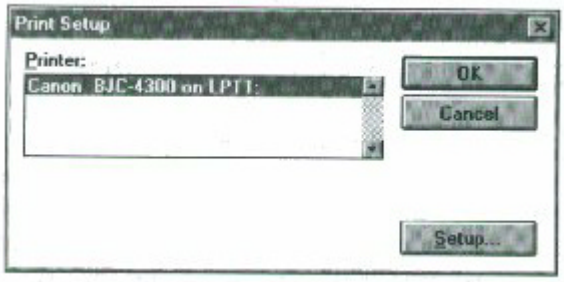

- Click on the Setup button if you want to make any adjustments as appropriate for printing your document. (See *Printer Setup Within Windows 95* or *Printer Setup Within Windows 3.1* for details.)

Printer Setup Within Windows 95

You can use the printer with all your Windows 95 applications

Opening the Printer Properties Dialog Box in Windows 95

You can open the Properties dialog box in one of the following ways:

- From within any Windows application, you can select the Print or Print Setup command.
- From the Printers folder, you can select the printer and then select the Properties command from the File menu.
- From the Printers folder, you can select the printer, click the right mouse button, and then select Properties from the drop down list.

Using the Printer Driver in Windows 95

The printing options are displayed on the following Windows 95 tabs: General, Details, Paper, Graphics, Setting, and Control. See The Windows Tabs section (page 2-5) for details.

For detailed information on any of the printing options, you can use Windows 95 on-line Help.

- Use the right mouse button to click an item on the screen; then click the **What's This?** command.
- Click **?** and then click an item.
- Press **F1**

Printer Setup Within Windows 3.1

You can use your printer with all your Windows 3.1 applications.

Accessing the Printer Options

You can access the printing options from the Printers dialog box in the Control Panel, or you can select the Print Setup option available from the File menu of most applications that run in Windows.

If the Print Setup option does not appear in the file menu for your application, refer to the user's manual supplied with the application. It should provide information about changing the printer setup parameters.

In Windows 3.1, the printing options are displayed on these tabs: Paper, Graphics, Setting, and Control. See the next section, *The Windows Tabs*, for details.

The Windows Tabs

The BJ Series Printer Driver for Windows has several tabs from which you select you printing options and learn about your printer drivers well as your printer.

- **General (Windows 95 only)**

  This tab allows you to add comments regarding the printer driver and print test page or a separator page. (You see this tab when you open the Properties dialog box from the Printers folder, but not from within a Windows application.

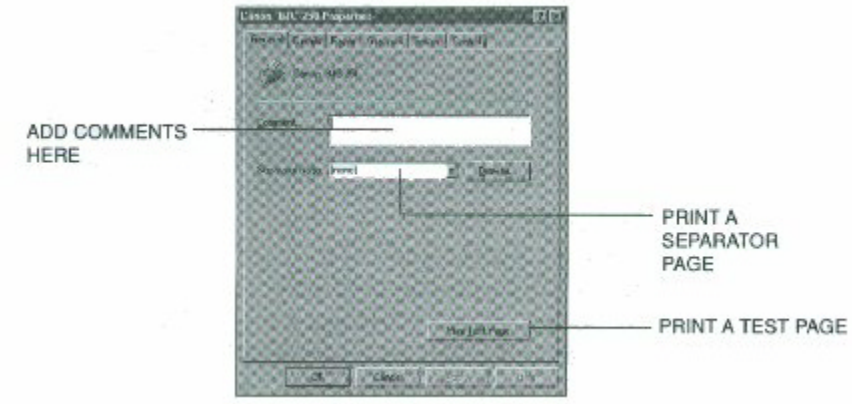

- **Details (Windows 95 only)**

  This tab allows you to specify printer port settings, spool settings, and time-out settings. (You see this tab when you open the properties dialog box from the Printers folder, but not from within a Windows application.)

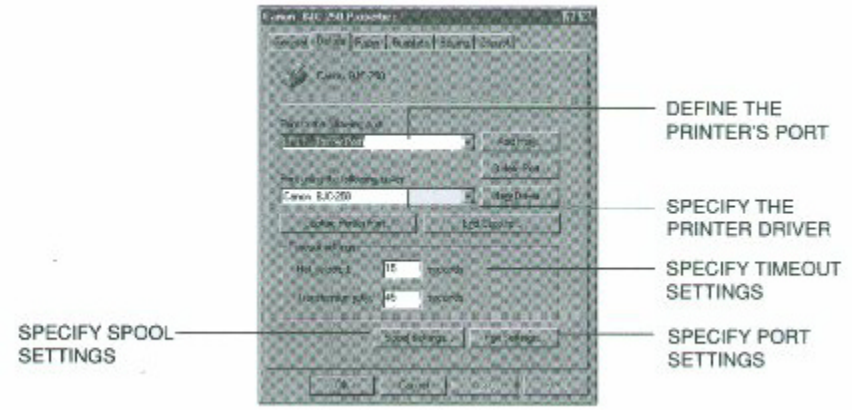

- **Paper**

  This tab allows you to specify page orientation, paper size, and type of print media.

(The printing options on this tab are the same for both Windows 95 and Windows 3.1.)

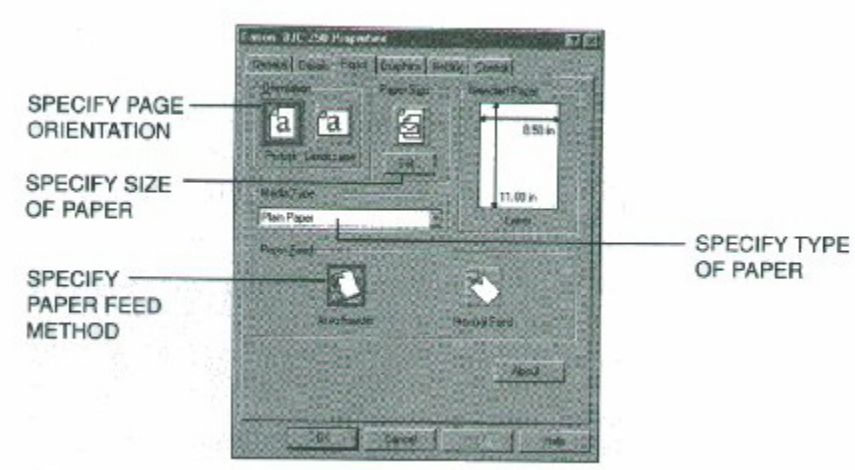

- **Graphics**

  This tab allows you to specify print quality, color model, and print model. (The printing options on this tab are the same for both Windows 95 and Windows 3.1. However, the Image Color Matching feature is available in Windows 95 only.)

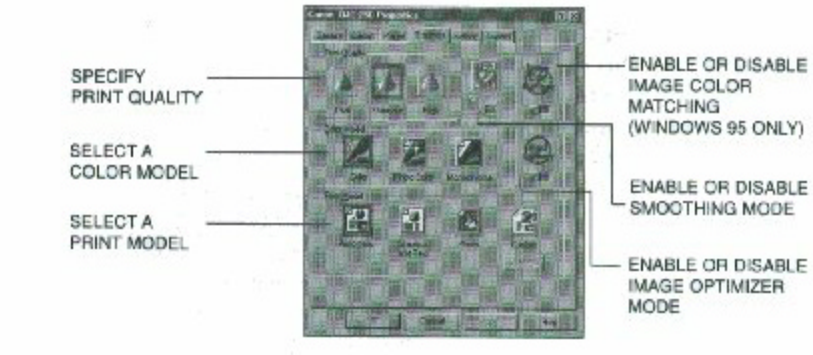

- **Setting**

  This tab allows you to turn on or off the Setup Analyzer and Cartridge Detection. It also allows you to save up to four custom print settings.(The printing options on this tab are the same for both Windows 95 and Windows 3.1.)

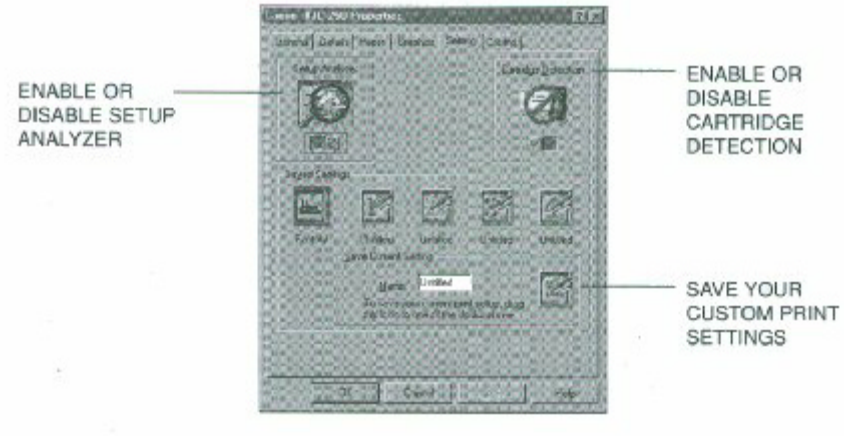

- **Control**

  This tab allows you to print test pages, turn off the printer, enable or disable the auto power on feature, and clean the print head. It also allows you to turn off the printer after a certain period of inactivity. (The printing options on this tab are the same for both Windows 95 and Windows 3.1.)

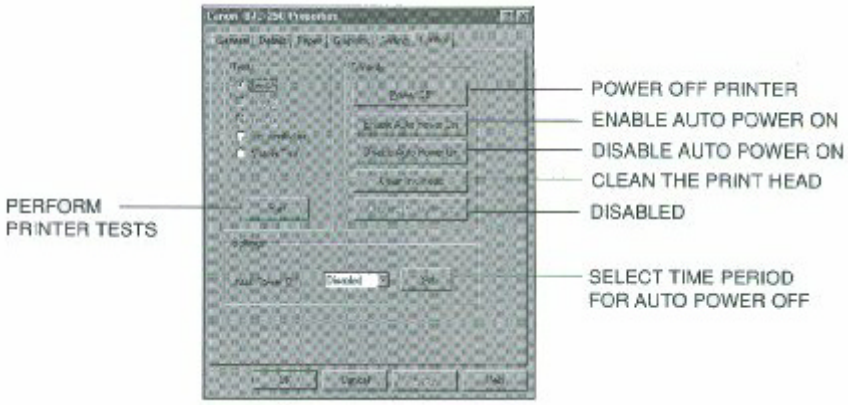

Specifying Your Printer Options

Be sure to use your on-line help to find out about the settings available for each printing options.

- To move between the Windows tabs, click on any of the tabs.
- To save the settings and exit, click the OK button.
- To cancel your settings selections on a tab, click the Cancel button.
- To save your settings without exiting, Click the Apply button.
- To access the Help file, click on the Help button.
- When you move the mouse cursor over one of the printing options, a help message appears at the bottom of the tab.

Recommended Graphics Settings

You can select the following printing options from the graphics tab to achieve the specified results.

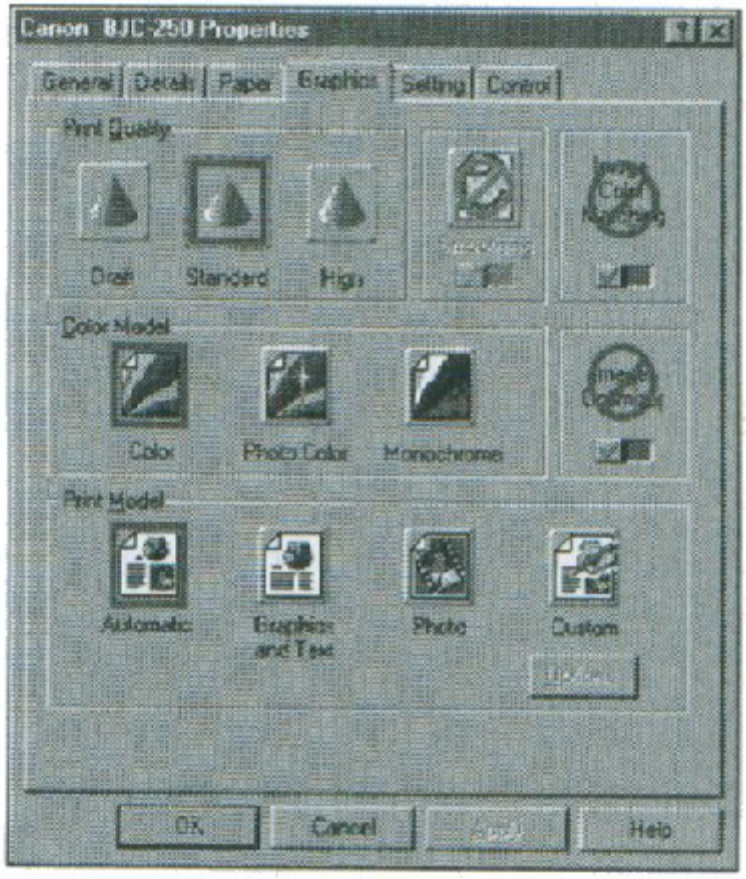

To achieve	Driver settings		Results
	Print Quality	Color Model	
Fastest B&W output possible	Draft 180 × 180 dpi	Monochrome	Uses less ink. Output quality is draft.
Fast letter quality output	Standard 360 × 360 dpi	Monochrome	Slightly slower than draft. Quality is standard.
Fast B&W photograph and graphic output	Standard and Fine On 360 × 360 dpi	Monochrome	Slower than B&W but better grayscale quality.
High quality output	High and Fine Off 720 × 360 dpi	Monochrome	Produces highest resolution output.
High quality photograph and graphic output	High and Fine On 720 × 360 dpi	Monochrome	Slower than Standard but optimizes B&W grayscale quality.
Fast color output	Draft 180 × 180 dpi	Color	Uses less ink. Output quality is draft.
Color output	Standard 360 × 360 dpi	Color	Fast color printing but quality is not optimized.
High quality color output	High and Fine On 720 × 360 dpi	Color	Uses Drop Modulation Technology to optimize color print quality but the print speed is slower.
Photo-realistic color printing	Standard 360 × 360 dpi	Photo Color	Produces photo-realistic color printing. (Requires BC-22e Photo BJ Cartridge and High Resolution Paper HR-101 or Glossy Photo Paper GP-201.)
True photo quality printing	High 360 × 360 dpi	Photo Color	Users Drop Modulation Technology to produce true photo quality. (Requires BC-22e Photo BJ Cartridge and High Resolution Paper HR-101 or Glossy Photo Paper GP-201.)

Using the Setup Analyzer

The Setup Analyzer allows the printer driver to evaluate your choice of choice of printing settings. On the Setting tab, click on the green check to enable the Setup Analyzer. Click on the red Ø symbol to disable it.

When you exit the printer driver and accept your printing settings by clicking the **OK** button, the Setup Analyzer (if enabled) checks to see if any of your settings are contrary to the recommended settings.

If there are no inconsistencies, a dialog box similar to this appears.

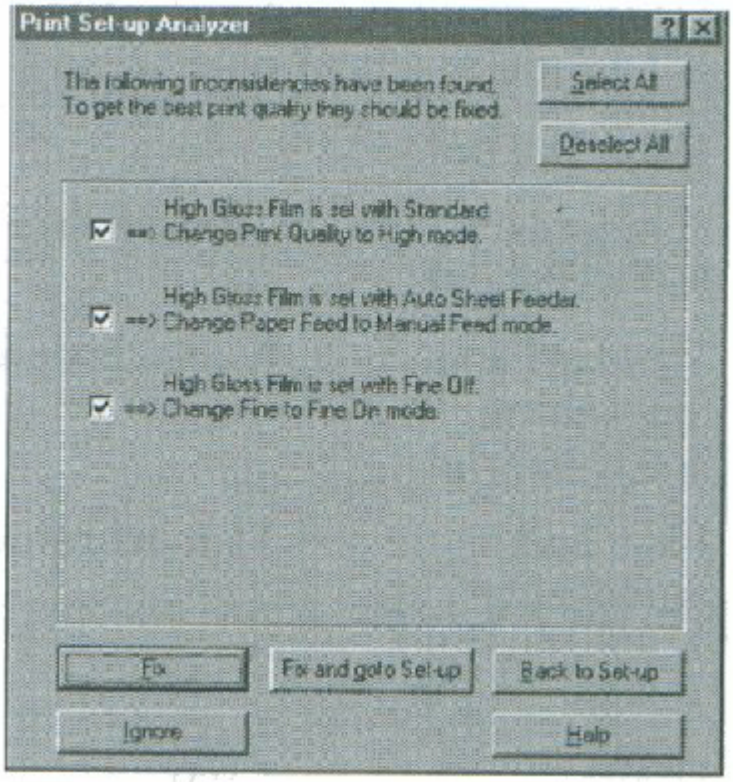

The inconsistencies appear with check boxes. You can use the dialog box buttons to select or deselect the inconsistencies, and/or fix or ignore the inconsistencies.

Using Cartridge Detection

Use Cartridge Detection if you want the driver to alert you when the installed BJ cartridge is not the correct choice to use with your Color Model setting. To enable Cartridge Detection, which is located on the Setting tab, click the green check. Click on the red Ø symbol to disable it.

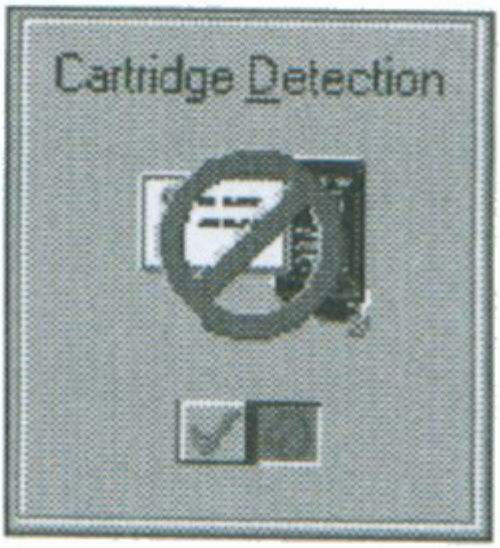

If cartridge Detection cannot detect the cartridge type, it advises you to check that you printer is on-line and that the cables are secure.

If you choose the monochrome Color Model and you have a BC-05 Color BJ Cartridge installed, you'll see:

> ***Performance Tip!***
> You now have a color cartridge installed in your printer. For faster printing speed, change the color cartridge to the monochrome cartridge.

Printing Speed Versus Color

The BJC-4300 Printer Driver for Windows can interpret and translate the full spectrum of colors, up to 16.7 million colors. When printing in color, there is a significant increase in the amount of information that the driver has to interpret and translate. When printing black ink only, the driver has only one color to interpret.

By decreasing the amount of colors that the printer driver has to interpret, you can significantly decrease the time needed to translate the information. This will speed up the overall printing process.

For Quick Color Printing

In the BJC-4300 Printer Driver for Windows, choose the following settings. These selections allow the printer driver to interpret and translate 256 colors, which will increase your printing speed. However, your print quality will not be optimized.

- Media Type-Plain Paper
- Print Quality-Standard; Fine is off
- Color Model-Color
- Print Model-Custom
- Color Selection-Fast Color

For High Quality Color

Select the settings shown below to allow the printer driver to interpret and translate up to 16.7 million colors. Keep in mind that your print speed will be slower than with other setting combinations.

- Print Quality- High; Fine mode is on
- Color Model-Color
- Print Model-Automatic

For Monochrome Printing

Use the BC-20 Black BJ Cartridge to optimize the printer's performance when you are printing black text and graphics only.

In the BJC-4300 Printer Driver for Windows, choose the following settings to tell your printer to print using black ink only.

- Media Type-Plain Paper
- Print Quality-Standard
- Color Model-Monochrome

- Print Model-Automatic

Other Ways to Improve Print Speed in Windows

To improve print speed, you can try the following:

- **Turn off the Print Manager in the Windows Control Panel (Windows 3.1 only).**

  This avoids the extra step of sending the print file to the Print Manager and may increase your printing speed by as much as 25%, depending on the computer you are using.

- **Add a permanent swap file in Windows 3.1.**

  Under the 386 Enhanced icon in the Windows Control Panel, add or create a permanent swap file that is from 4 MB to 9 MB. The computer will be able to prepare the print file faster. See your Windows documentation for instructions.

- **Avoid diffusion halftones.**

  In the Custom Settings dialog box, choose Diffusion only when printing final output or photographic images. Choosing a Halftone setting of Fine allows the documents to print as much as 20% faster because the computer does not need to compute to "best possible position" for each dot.

- **Avoid screen matched color.**

  In the Custom Settings dialog box, avoid Match as the Color Adjustment setting. The screen matching feature takes longer to process in the computer because it requires special information.

- **Avoid automatic settings.**

  Although the automatic settings are easy to use, the computer must interpret the printed page. This takes more time than if you select each setting.

- **Free up your memory.**

  Use only one software program at a time and unload any screen saving utilities or programs stored in Windows background; this frees up more memory for Windows processing.

- **Use Monochrome when possible.**

  If you will be printing text in black only, choose a Color Selection of Black and White rather than Grayscale. Print draft documents in Monochrome rather than Color, or use Draft print quality when printing in color.

- **Limit the number of colors on each page.**

  The computer will need to calculate and transmit fewer dots. Too many colors can make the image confusing and less effective as well as cause the print speed to slow down.

- **Use primary colors when printing presentation graphics.**

  Use Black, cyan, yellow, magenta, blue, green, and red when possible. The computer will need to calculate and transfer less dot information.

- **Use the Draft print quality.**

  The printer will need to image fewer dots.

- **Use Plain Paper as Media Type.**

  The print head will make only on pass for each printed line.

- **Use smaller graphics and more white space in your documents.**

  The computer will be able to prepare the print file faster.

- **Add RAM to your computer.**

  The computer will be able to prepare the print file faster.

- **Use a computer with a faster processor.**

  The computer will be able to prepare the print file faster.

Paper Handling

This chapter describes how to use the printer for all your printing operations. It includes:

- Selecting paper types
- Setting the paper thickness lever
- Summary of printer settings for various print media
- Automatically loading paper
- Manually feeding paper
- Printing on envelopes
- Using Canon's Specialty Papers

To ensure the best performance of your printer, you'll want to select the best paper and load it correctly. You can stack paper in the sheet feeder to load it automatically, or you can manually feed one sheet at a time.

Selecting Paper Types

One of the most important things you can do to assure the best possible performance of your Bubble Jet printer is to select the correct paper. Your printer produces letter quality print on most plain paper bond papers, including cotton bond and photocopying papers; it does not require special ink jet papers. However, the print quality varies with different paper types. Be sure to test a type of paper before you purchase a large quantity.

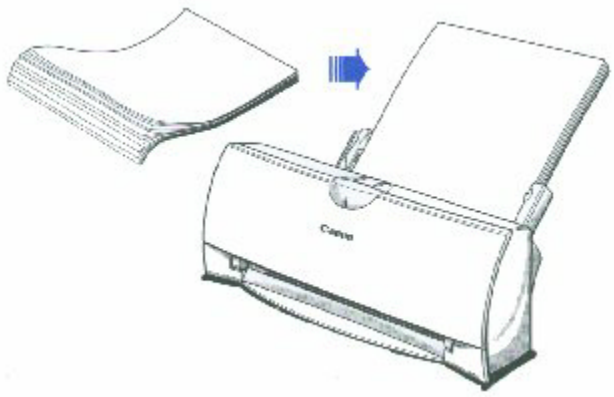

Plain Paper
The printer supports paper sizes of letter, legal, and A4 in portrait orientation. You can use regular copier paper, cotton bond papers, and typical letterhead. Always use paper without curls, folds, staples, or damaged edges.

Glossy Photo Paper
Canon Glossy Photo Paper GP-201 is a high gloss, thicker paper that produces the look and feel of a photograph and provides excellent color print quality. Use this paper with the BC-06 Photo BJ Cartridge to produce photo-realistic prints from your printer. Be sure to print on the glossy side. (In your print driver, select Glossy Paper when you have Glossy Photo Paper loaded.)

Banner Paper
Canon's Banner Paper is specifically designed for printing one continuous sheet in a banner format. The connected sheets are divided by perforation. you can print from two to six sheets at one time.

High Resolution Paper
The Canon High Resolution Paper HR-101 is designed to produce photo-realistic quality output with sharp and vivid graphics. For best results, use the optional BC-06 Photo BJ Cartridge to produce images comparable to your favorite photographs.

T-Shirt Transfers
Use Canon's popular T-Shirt Transfers TR-101 to create and personalize T-shirts, sweatshirts, aprons, tablecloths, napkins, tote bags, and anything else your imagination

allows! Use on any cotton or cotton/ poly blend fabric. Your image is printed in mirror image (when you use T-Shirt Transfer mode through the BJC-250 Printer Driver for Windows) so when you iron it onto the t-shirt the image is viewed correctly.

Greeting Cards
Get the most out of your Canon Creative or other card making software with Canon Greeting Cards GC-101. These cards give your unique, personalized cards the look and feel of professional cards. You can create cards, invitations, announcements, and more.

Bubble Jet Paper (water resistant)
The Canon Bubble Jet Paper LC-301 has been developed for high quality printing with minimal or no smearing or running when in contact with water or damp surfaces, making a good choice for damp or rainy environments. The paper is specially created and printable on both sides. (In your printer driver, select Plain Paper when you load this paper.)

Fabric Sheets
Use Fabric Sheets FS-101 for Canon Bubble Jet printers to print banners, pillow covers, scarves, flags, and other textile items. Use these sheets for appliqués and other craft and sewing projects. Fabric sheets are 9.5" x 14".

Transparencies
CF-102 Transparencies from Canon are recommended. These transparencies produce excellent contrast, sharpness, and color.

Back Print Film
Canon Back Print Film BF-102 has been specially developed for Canon Color Bubble Jet printers. The film is designed to deliver brilliant, high-intensity color images suitable for business presentations, design work, or professional reports. Back Print Film is printed on the back (non-glossy) side of the film in mirror image and then viewed from the front or glossy side using a backlighting device. For more details, ask a Canon Authorized Dealer for information or refer to the manual supplied with the film.

High Gloss Film
The Canon High Gloss Film HG-101 features a bright white finish that lends striking visual power to charts, graphs, and photographic images. Use this film to make your presentation materials and graphics look professional.

If you are printing in an application outside Windows, your software application or printer driver must support mirror image printing in order to use Back Print Film or T-Shirt Transfers

---

Paper Guidelines

When selecting or loading paper, please remember the following:

- Attempting to print on damp, curled, wrinkled, or torn paper can cause paper jams and poor print quality.
- Use cut-sheet paper only. You can use multipart paper.
- When using graph paper, the lines may not match because the 1/6 inch line spacing of the printer is slightly less than that of graph paper.
- If the print density of your page is very high , light paper stock may curl slightly due to the large amount if ink. If you need to print dense graphics, try printing on heavier stock.
- Do not use thicker paper than meets the specifications for this printer. Printing with a paper that is thick enough to come in contact with the print head nozzles may damage the BJ Cartridge.

Setting the Paper Thickness Lever

To ensure trouble-free paper handling, you'll want to set the paper thickness lever before loading paper.

- Center for the BC-21e Color BJ Cartridge
- Left for the BC-20 Black BJ Cartridge
- Right for heavier-weight print media or envelopes

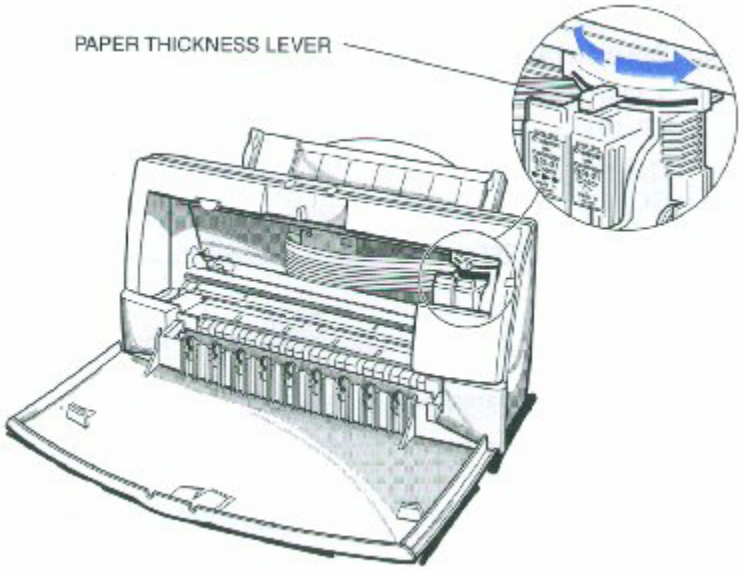

Note

Be sure check this lever when you change BJ cartridges, and before and after printing on heavier-weight print media or envelopes.

Printer Settings for Various Print Media

Media	Paper thickness lever		Paper feed	
	BC-21e	BC-20	Method	Limit (Sheets)
Plain paper	Center	Left	Auto	Approx. 100 (0.4" stack)
Glossy Photo Paper GP-201	Center		Auto or Manual	1
Banner Paper	Right		Auto	1 (2 to 6)
High Resolution Paper HR-101	Center		Auto	Approx. 80 (0.4" stack)
T-Shirt Transfers TR-101	Right		Auto or Manual	1
Greeting Cards GC-101	Right		Manual	1
Bubble Jet Paper LC-301	Center	Left	Auto	Approx. 100 (0.4" stack)
Fabric sheet FS-101	Right		Auto or Manual	1
CF-102 Transparencies	Center		Auto	50
Back Print Film BF-102	Center		Auto	10
High Gloss Film HG-101	Center		Manual	1
Other heavier-weight print media	Right		Manual	1
Envelopes				
Single	Right		Manual	1
Stack	Right		Auto	15

Loading Paper

You can stack paper in the sheet feeder to load it automatically, or you can manually feed one sheet at a time through the manual feed slot.

You can place approximately 100 sheets of plain paper (20 lb. or 75 g/m²) in the sheet feeder at a time.

You can stack approximately 50 sheets of transparency film or 10 sheets of back print film in the sheet feeder. However, these special media may not advance correctly under unusual environmental conditions (such as extreme temperatures or humidity). If you have trouble with special papers becoming skewed or feeding multiple sheets, do not stack them in the sheet feeder. Load them one sheet at a time.

Automatically Feeding Paper

1

Set the paper thickness lever.

- Center for the BC-21e Color BJ Cartridge
- Left for the BC-20 Black BJ Cartridge.

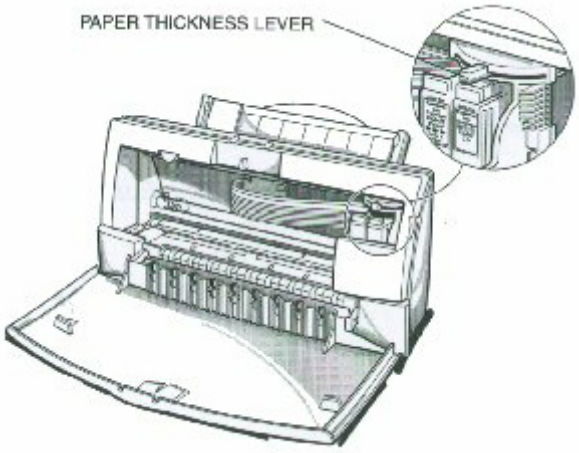

2

Pull the paper support up until it stops.

Pull out the paper output tray and its extension.

- For letter-size and A4-size paper, extend the paper output tray.

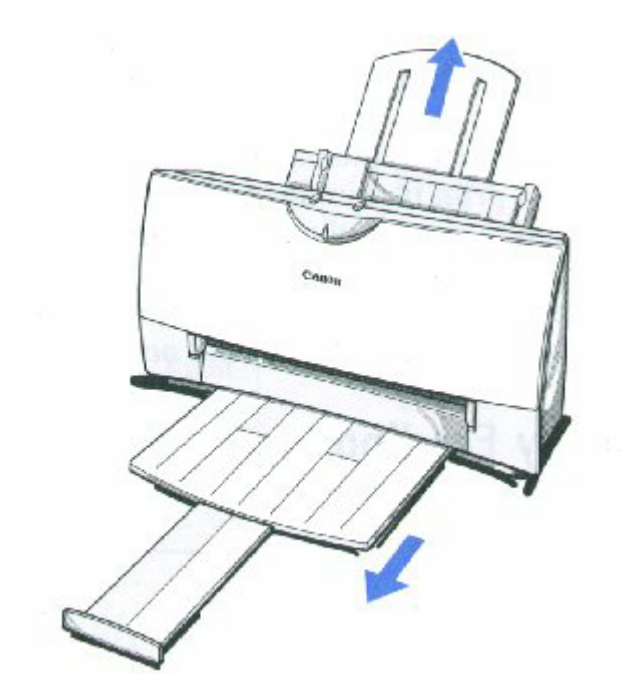

3

Fan the paper.

- For best results, fan the paper before loading it.
- Always fan a stack of paper along the edge that will feed into the printer first.

4

Slide the stack of paper into the sheet feeder until it stops.

- Align the edge of the paper with the right edge of the sheet feeder.
- Secure the stack with the paper guide.

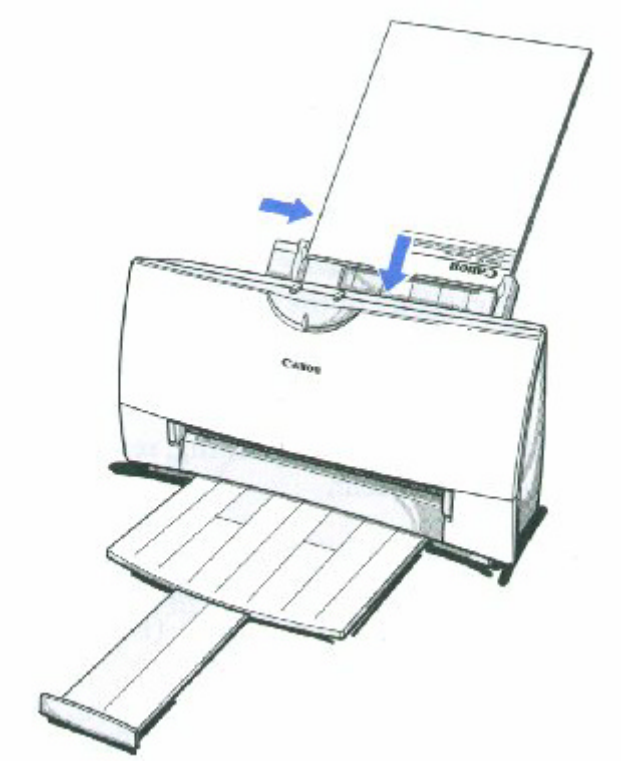

5

Start your print operation.

- Make sure that the printer is turned on.

Auto Feed Guidelines

When automatically feeding stacks of paper, follow these guidelines:

- Do not open the front cover while printing. This may cause paper jams, smudges, or malfunctions.
- Do not leave paper stacked in the printer for long periods of time; longer sheets of paper may become bent or curled over time. This may cause the paper to misfeed or jam.
- If your printed page contains lots of graphics, the ink on the page may be damp due to the print density. Remove the page right away and allow the ink to dry.
- The capacity of the paper output tray is 20 sheets of paper. To reduce paper jams, remove paper from the output tray before the count reaches 20.
- If paper curls after printing, remove it immediately; otherwise, paper jams may occur.
- The platen (a roller on the inside of the printer) may become inked if you print data beyond the width of the page. If this happens, clean the platen with a soft cloth. (For details on cleaning the platen, see page 4-3.)
- Depending on the density of your printed pages, the ink may need time to dry. Within two to three seconds, the ink becomes smudge resistant. After drying several minutes, the ink becomes water resistant.

- Do not try to load paper into the sheet feeder beyond the paper limit mark or the tab on the right side of the sheet feeder; stacking too much paper may cause paper feeding or printing problems.

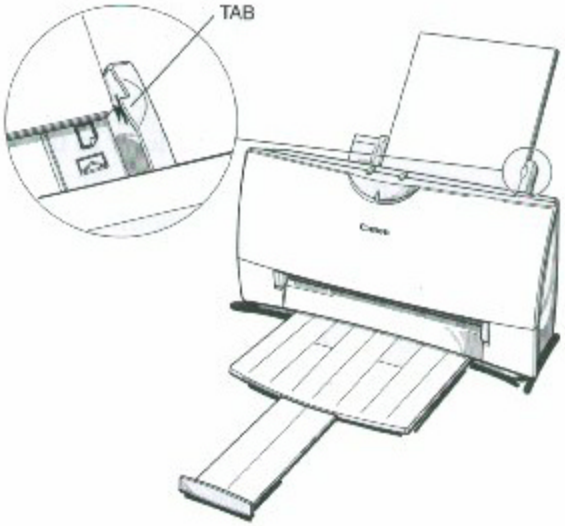

- Make sure there are no gaps between the stack of paper and the paper guide nor the right edge of the sheet feeder.

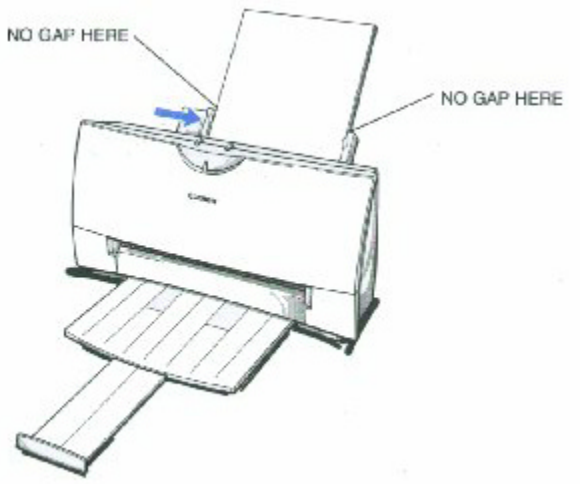
NO GAP HERE
NO GAP HERE

Manually Feeding Paper

You use the manual feed function when printing on heavier-weight print media (17 lb to 30 lb or 64 g/m² to 105 g/m²).

1

Set the paper thickness lever.

- If you are manually feeding heavier-weight print media, set the paper thickness lever to the right.

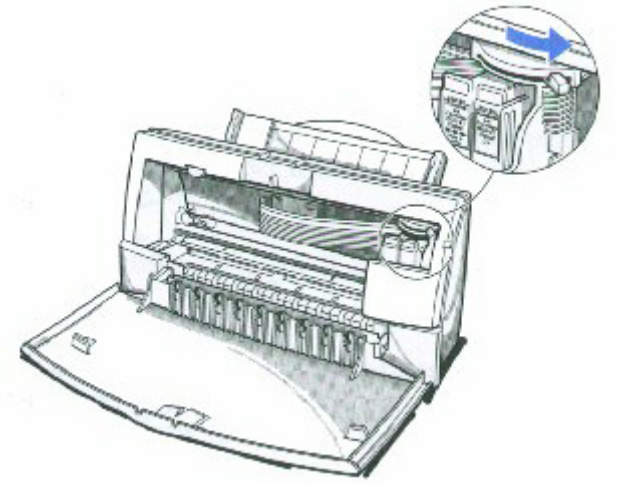

2

Start your print operation.

- If you are using Windows, you must select Manual Feed in the BJC-4300 Printer Driver for the printer to accept manually fed paper.

3

Insert the single sheet.

- Slide the paper into the manual feed slot in the back of the printer.
- Align the sheet with the left edge of the manual feed slot.
- Hold the sheet for about two seconds until it feeds automatically.
- The printer will automatically load the paper into position.

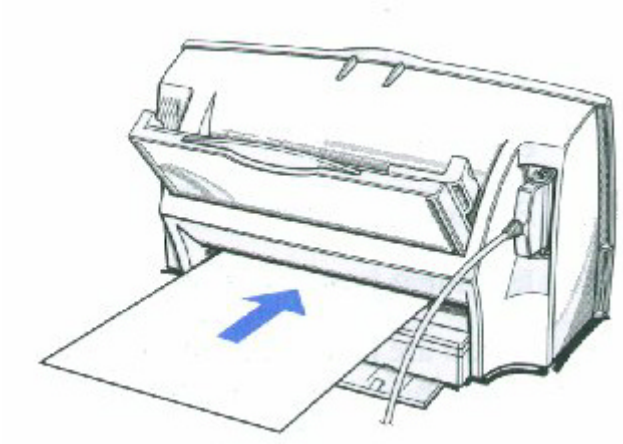

After printing on thick paper or envelopes, set the paper thickness lever (inside the printer) back to the left or center position before printing on other paper types.

Printing on Envelopes

You can stack up to 15 envelopes in the sheet feeder or you can manually feed envelopes one at a time.

U.S. Commercial number 10 (COM10) envelopes and European DL envelopes are recommended. You may be able to stack envelopes of other sizes in the sheet feeder; however, Canon cannot guarantee consistent performance on envelope sizes other than COM10 and DL.

The following envelopes are not recommended because they may cause jams or smears, or may damage your printer.

- Envelopes with windows, holes, perforations, cutouts, and double flaps.
- Envelopes made with special coated paper or deeply embossed paper.
- Envelopes using peel-off sealing strips.
- Envelopes in which letters have been enclosed.

When you are ready to print on envelopes, follow these steps to stack envelopes in the sheet feeder. (You can also manually feed envelopes one at a time.)

1

Set the paper thickness lever.

- Make sure that the paper thickness lever is set to the right.

2

Make sure the paper support is raised, and the paper output tray is extended.

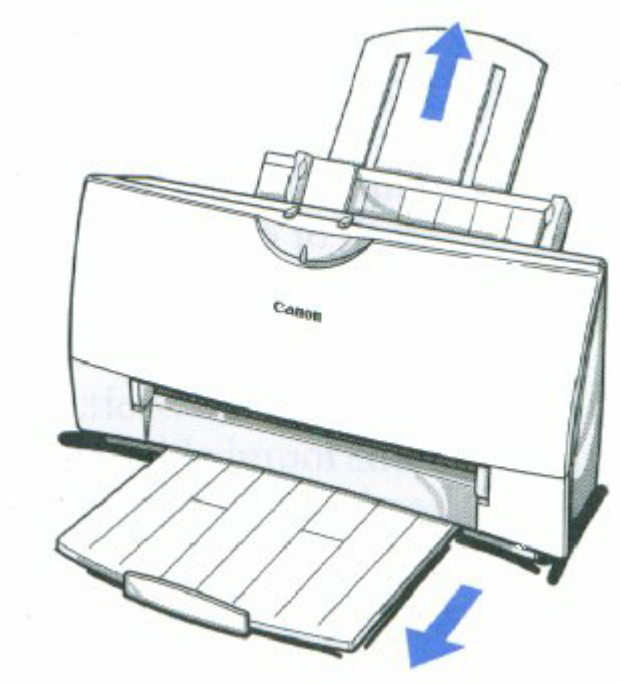

3

Prepare the envelopes.

- Arrange the stack of envelopes on a firm surface and press down firmly on the edges to make the folds crisp.
- Press all the way around the envelopes to remove any curls and expel air from inside the envelopes.

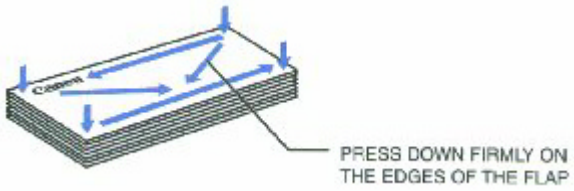

- Make sure any curls are removed from the flap of each envelope.

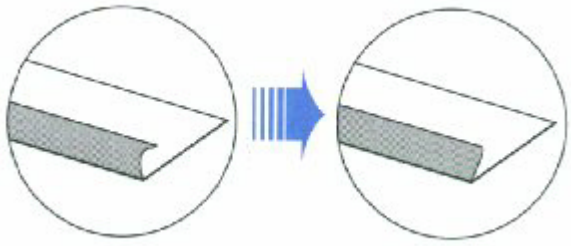

4

Insert the envelopes.

- Slide a stack of envelopes into the sheet feeder until it stops.
- Align the edge of the paper guide with the left edge of the stack of envelopes.

5

Start your print operation.

- Make sure the printer is on.

Using Canon's Specialty Papers

This section provides guidelines for printing on Canon's Specialty Papers and describes special procedures required for High Resolution Paper, Fabric Sheets, and Banner Paper.

Specialty Paper Guidelines

Be sure to read any instructions that come with your Canon Specialty Paper. These instructions provide important information regarding how to achieve the highest print quality with these papers.

For transparency film, back print film, high gloss film, and glossy photo paper, follow these guidelines

- When automatically feeding transparencies or back print film, remove each sheet after it is delivered. Do not allow film sheets to stack up.
- Let the printed sheets of film or paper dry completely before storing them.

Paper Type	Drying time
Canon Glossy Photo Paper GP-210	10 minutes
Canon Fabric Sheet FS-101	1 hour
Canon CF-102 Transparencies	15 minutes
Canon Back Print Film BF-102	15 minutes

- When a sheet of film has dried completely, cover its printed side with a sheet of plain (not coated) paper before storing it; this is recommended even if you place the sheets of film in a clear file or plastic holder.

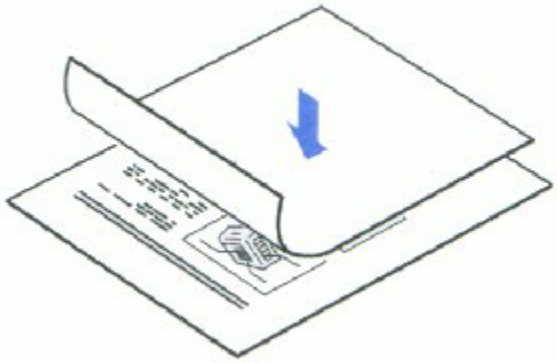

- Do not leave the film in the sheet feeder for long periods of time. Dust and dirt may accumulate on the film resulting in spotty printing.
- To avoid smudging caused by finger prints, use a pair of thin cloth gloves while handling the film.
- To avoid fading, do not expose the printed film to prolonged sunlight.
- Store unused film at temperatures between 59ºF to 86ºF (15ºC to 30ºC). The relative humidity should be between 10% and 70%.

Uncurling Back Print Film

If Back Print Film becomes curled, follow these steps to uncurl it:

1

Cover the non-glossy side of the film with a sheet of plain paper.

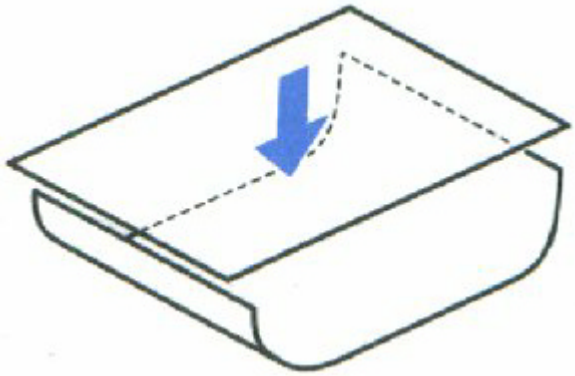

2

Roll the film and paper up in the direction opposite the curl.

- Do not roll the film too tight.
- The film and paper rolled together should be about one inch (2.5cm) in diameter.

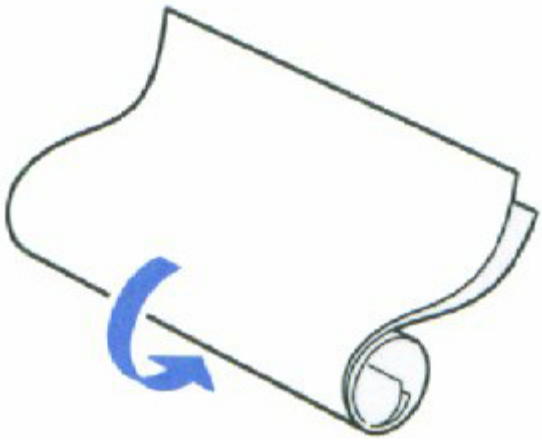

3

Keep the film rolled up for about five minutes.

- You may want to fasten the roll with a small piece of tape.

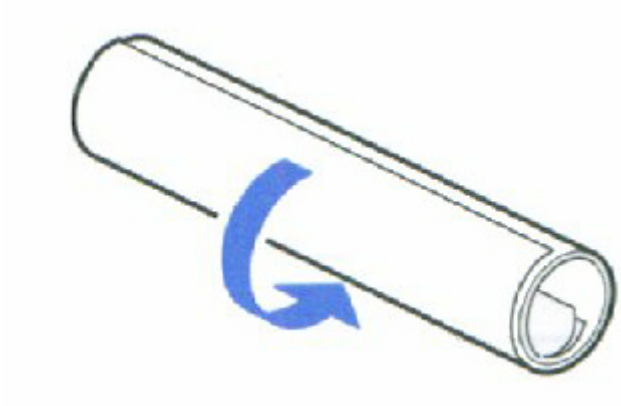

High Resolution Paper HR-101

Using the Printer's Output Tray

The paper output tray on your printer is equipped with paper output guides. When using the BC-22e Photo BJ Cartridge to print on Canon's High Resolution Paper (HR-101), lift the paper output guides on both sides of the printer's output tray:

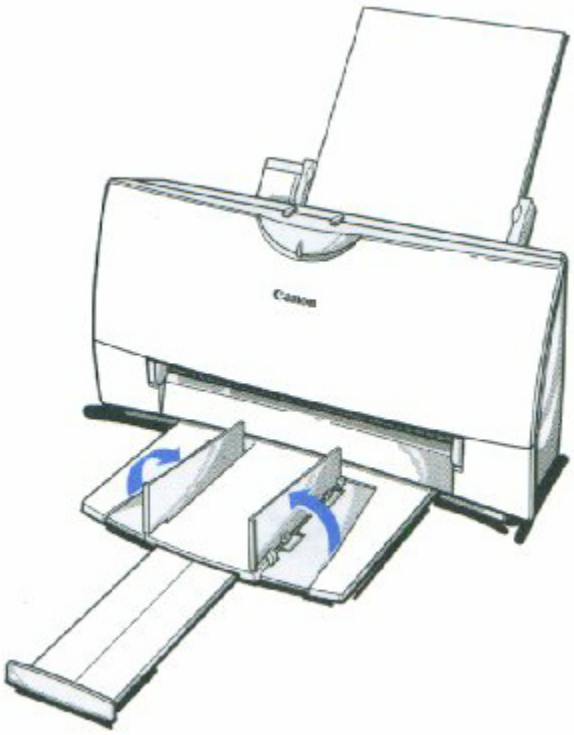

- Always lift both paper output guides.
- With the paper output guides up, the output tray holds 20 sheets.
- After using the BC-22e Photo BJ Cartridge to print on High Resolution Paper, lower the paper output guides.

Using the Cleaning Sheet

Canon's High Resolution Paper HR-101 is designed for high quality printing. This paper is specially coated to produce delicate color output. After using a package of High Resolution Paper (200 sheets), you need to use the cleaning sheet enclosed with the paper to remove paper dust from the printer's rollers; this will help prevent paper feed problems.

1

Set up the printer.	• Make sure the paper thickness lever is to the center. • Make sure the paper support and paper output trays are extended.

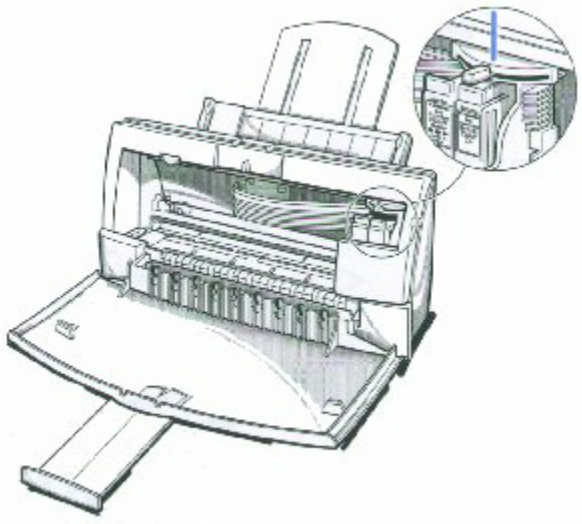

2

Insert the cleaning sheet.

- Remove the two pieces of tape from the sheet.
- Insert the sheet with the sticky side out (toward you) and down (going into the sheet feeder).
- Adjust the paper guide to the edge of the cleaning sheet.

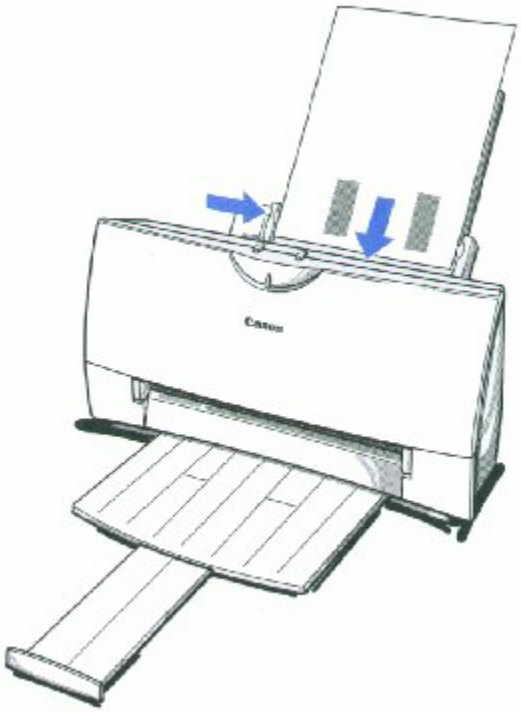

3

Press the RESUME button.

- Make sure the printer is on.
- Press **RESUME** to advance the cleaning sheet into the printer.
- Press **RESUME** again to start cleaning.
- The printer feeds the sheet and then eject it.
- Use a cleaning sheet once only.

Fabric Sheet FS-101

Fabric Sheet FS-101 for Canon printers comes with a booklet that describes special handling procedures. Be sure to look through this booklet for special information regarding the Fabric Sheets. This section describes specific steps for using Fabric Sheets with the printer.

Be sure to follow these guidelines.

- To avoid paper jams, smearing, and other problems, do not open the printer's cover during printing.
- Use the fixing agent that comes with the Fabric Sheet FS-101
- Do not touch newly printed fabric sheets until ink is completely dry. This takes about one hour.

Printing on a Fabric Sheet

1

Set up the printer.

- Make sure the paper thickness lever is to the right position.
- Make sure the paper support and paper output tray are extended.

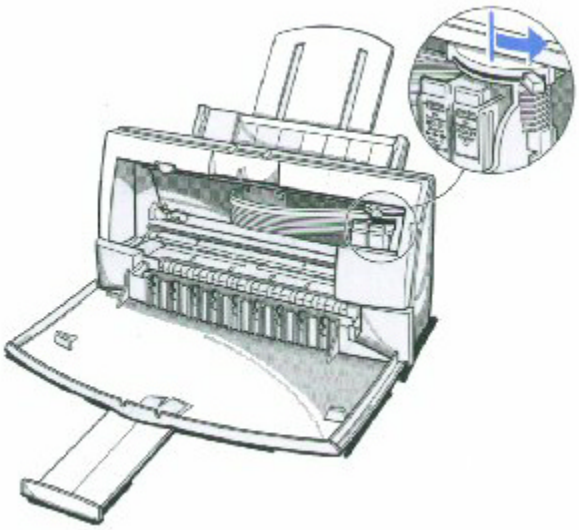

2

Insert the fabric sheet.

- Insert the sheet with the cloth side out (toward you) and the open end up (away from the sheet feeder).
- Adjust the paper guide to the edge of the fabric sheet.
- Do not attempt to load more than one sheet at a time.

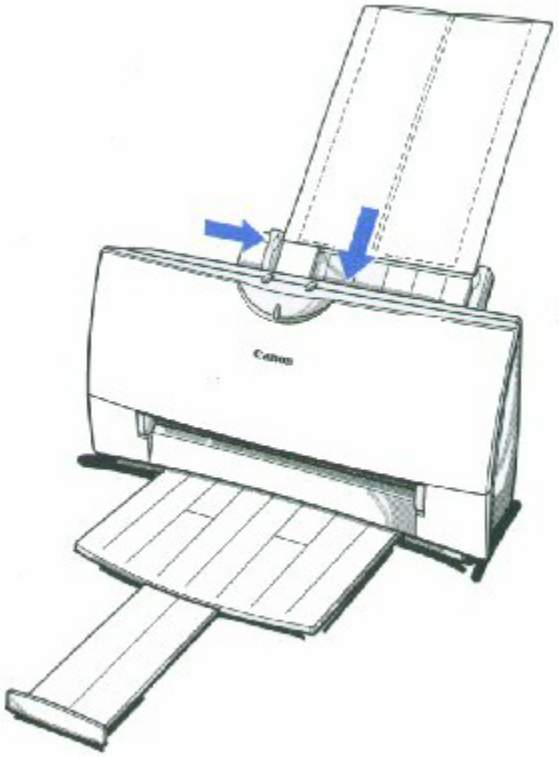

3

Set up the BJC-4300 Printer Driver for Windows.

- In the Paper tab, select **A4** for the Paper Size and select **Fabric Sheet** for the Print Media.
- In the Graphics tab, select **High** for Print Quality. You may also want to select **Fine** mode.
- Start the print operation from your Windows application.

4

Dry and then wash the fabric sheet.

- Let the printed fabric sheet set for about one hour to allow the ink to completely dry.
- When dry, peel the film backing from the printed fabric sheet. Do not remove the film backing before printing.
- Wash the printed fabric sheet for about three minutes under lukewarm running water to remove extra ink.
- Hang the fabric sheet up to dry it again.
- Iron the dried fabric sheet with a clothes iron.
- See the booklet that comes with Fabric Sheet FS-101 for details on drying and washing.

Printing on Banner Paper

For best results, use Canon Banner Paper.

To set up a print job on banner paper, you must decide on the number of sheets you need. You can print banners from 2 to 6 sheets in length.

Note

Always leave an extra sheet at the end of the banner- just in case the type runs over.

The shaded portions of the drawing below illustrate the maximum recommended printing area of banner paper.

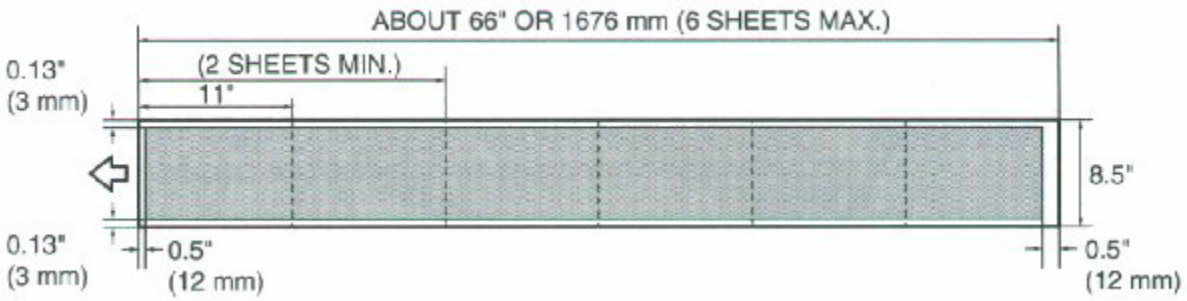

Note

- Printing on banner paper requires quite a bit of ink. If you think your BJ cartridge may run out of ink, use a new BJ cartridge.
- For best print results on banner paper, use light design patterns.
- To prevent ink from running over the edges of the sheet, print within the margins shown in the previous illustration.

Set the paper thickness lever for banner paper.

- Open the front cover. Use both hands to open the front cover.
- Set the paper thickness lever to the right.
- Close the front cover.

2

Cut the banner at a crease according to the length you need.

- The maximum length you can use is six sheets (66 inches or 1676mm).

- Always leave an extra sheet at the end of the banner- just in case the type runs over.

3

Insert the banner paper.

- Align the first sheet of the paper with the right edge of the sheet feeder and slide it into the printer until it stops.
- Then adjust the paper guide to the edge of the paper.
- Do not allow the paper to hang over the edge of the desk or work table.
- Do not extend the paper support when loading banner paper.

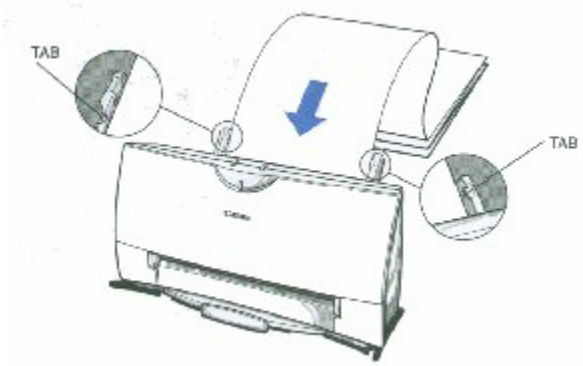

4

Fold the banner paper.

- Gently fold the paper at the crease between the first and second sheet.

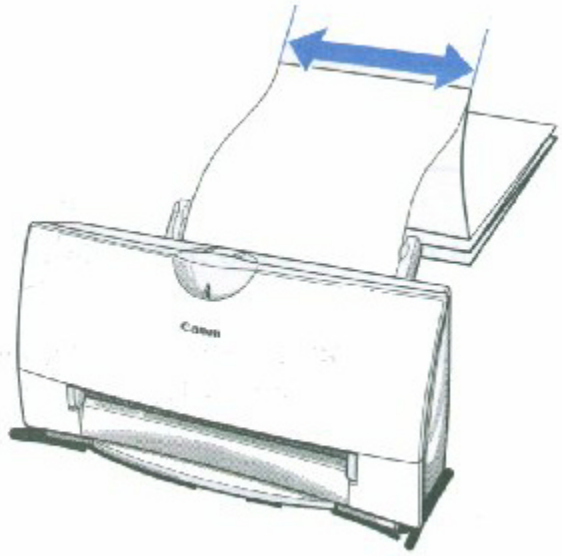

5

Make sure the paper exit area is clear.

- Clear space in front of the paper output slot of the printer for at least one sheet.

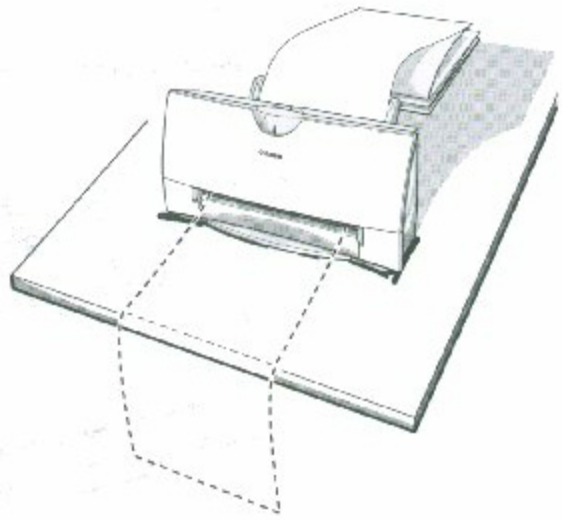

6

Set up your printer driver.

- Open the Windows application you are going to use to print. From the File menu, select **Print.** Then select your print options using the BJC-4300 Printer Driver for Windows.
    - For the Paper Feed Method, select **Automatic Feed.**
    - For the Paper size, select **Banner.**
    - See your application software instructions for other options.

7

Start printing.

- Click OK or Print to start the print job.
- Do not allow the paper to hang over the edge of the desk or work table directly.
- Clear enough space in front of the printer for at least one sheet of paper to rest after printing.

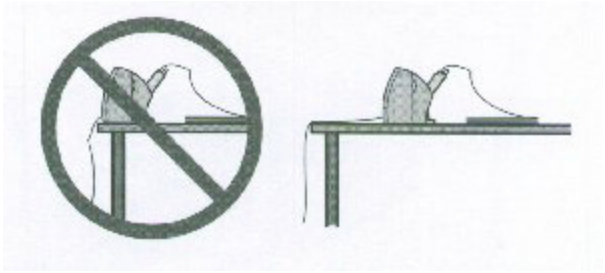

Maintaining the Printer 4

This chapter cover the care required for your printer. It includes:

- Printer guidelines
- Cleaning the printer
- Printing the test pages
- Cleaning the print head
- BJ cartridge guidelines
- Replacing the BJ cartridge
- Replacing a BJ tank in the BC-21e Color BJ Cartridge
- Storing a BJ cartridge
- Installing and Removing the Optional Color Image Scanner Cartridge
- Transporting the printer

Printer Guidelines

Follow these guidelines to avoid damage to your printer and harm to you or others:

- Set the printer on a stable surface. Do not use an angled printer stand. Avoid setting the printer in direct
  sunlight.
- Keep the front cover closed when printing.
- Do not set anything on top of the printer
- Make sure the power is off any time you connect or disconnect the AC adapter or interface cable.
- Do not unplug the AC adapter unnecessarily.
- Do not unplug the printer or turn off a power strip to which the printer is attached when the printer's power is turned on. This may prevent the print head unit from returning to the home position on the right and being capped, which may cause the print head to dry out. This is critical. If left uncapped, the print head unit may clog and may need to be replaced.
- Do not move the mechanism that holds the BJ cartridge. Attempting to move the BJ cartridge holder may damage delicate mechanical parts.

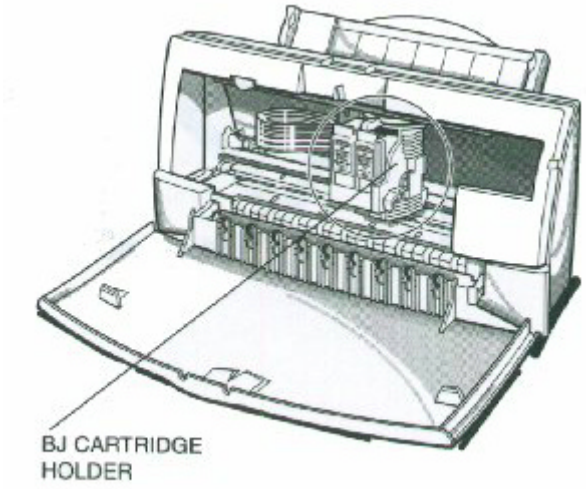

Cleaning the Printer

Your Printer requires little routine maintenance. Perform the following maintenance, as necessary, to keep your printer in good operating condition.

Caution

- Make sure the printer is turned off before cleaning it. It is a good idea to unplug the AC adapter
  also.
- Do not clean the exterior of the printer with volatile liquids such as thinners, benzine, or any
  spray-type or chemical cleaners; doing so will damage the surface of the printer.
- When cleaning the printer, avoid the area near the print head on the BJ cartridge. Do not touch the print head. Ink may leak out and cause stains.

Clean the printer regularly to avoid printing problems. Remove any ink mist or paper debris from the interior of the printer using a soft cloth moistened with water. Clean especially well around the platen area. If the rollers become dirty, you can clean them using a small soft brush.

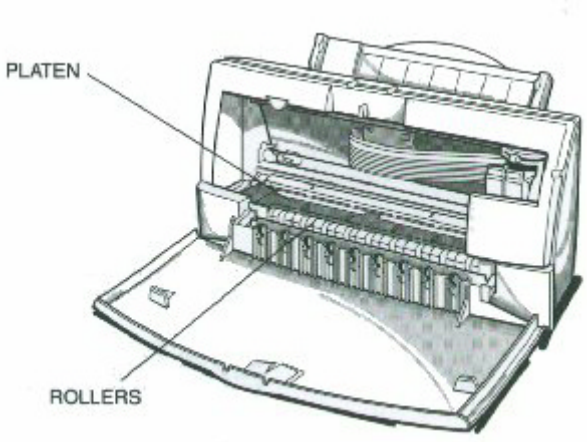

Clean the exterior of the printer with a soft cloth moistened with water. Clean away smudges and dust.

Note

Do not use paper products (such as paper towels or tissues) to clean the inside of the printer.

Printing the Test Pages

You can print these test pages to check the operation of your printer and your print quality.

Test A
This test prints a repeating pattern of characters.

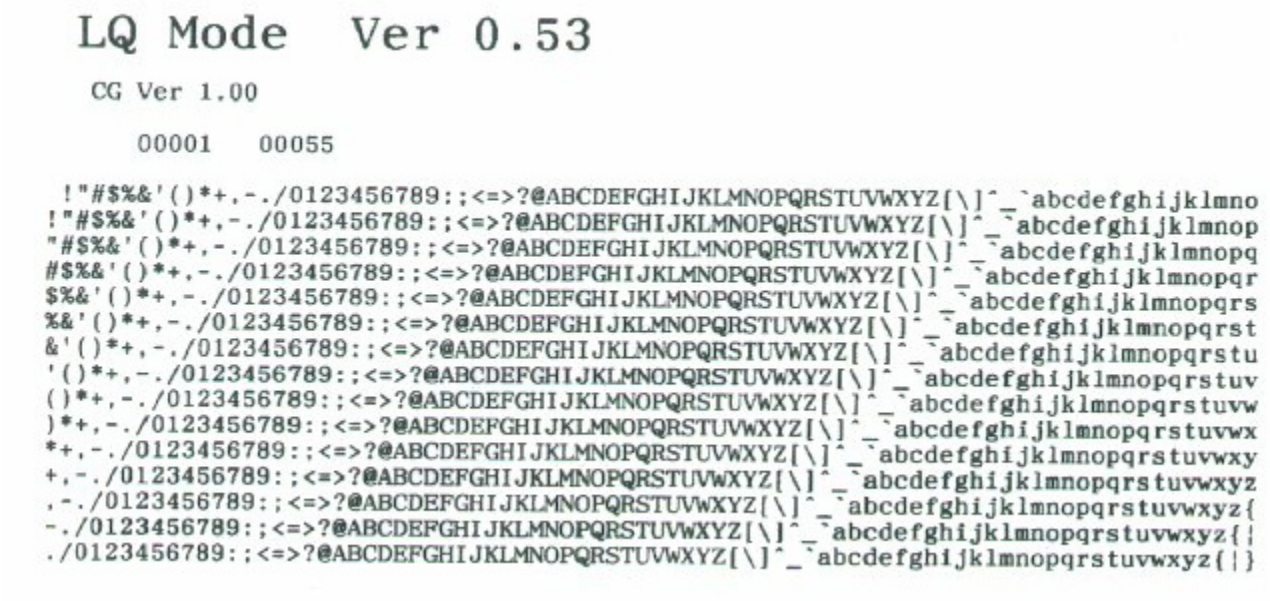

Demonstration
This test prints a sample page describing the printer's features.

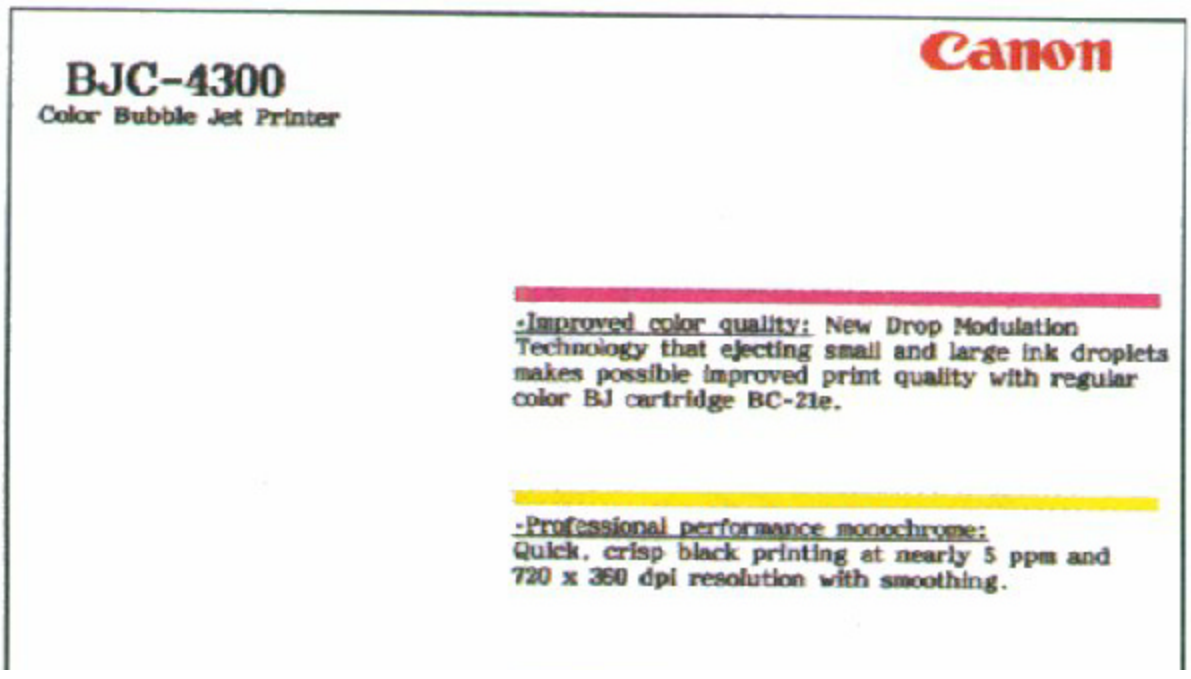

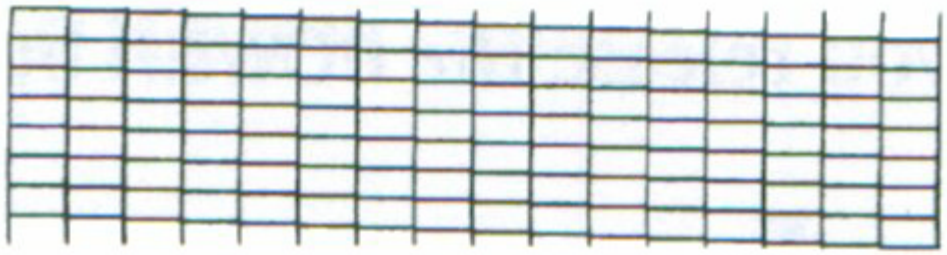

Printing the Test Page From Windows

You use the Test option on the Control tab in your BJC-4300 Printer Driver for Windows to print a self test, demonstration page, or a nozzle test pattern.

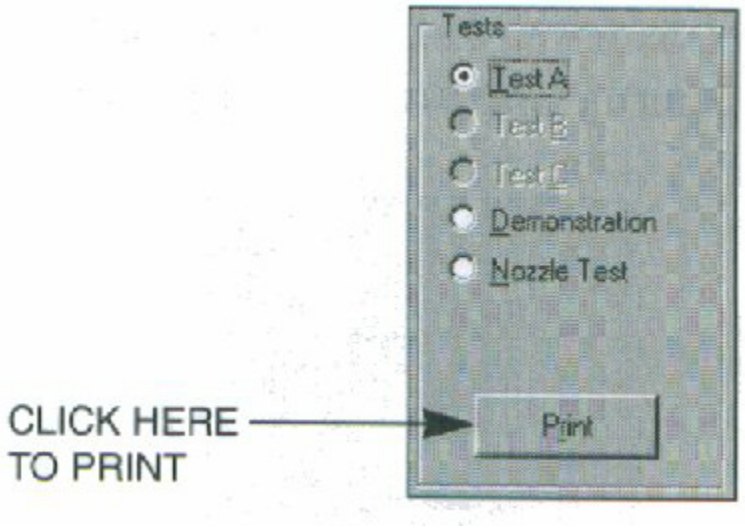

Before selecting a Test option, make sure paper is properly loaded in the sheet feeder (see *Automatically Feeding Paper* starting on page 3-7).

Click on the Test option and then click on the **Print** button.

Printing the Test Pages Using the Operators Panel

To print a test page, make sure the printer is turned off and paper is loaded.

- Press and hold the **POWER** button until you hear the number of beeps that correspond to the test page you want to print.

Test Page	Number of Beeps	Pages Printed
Demonstration	1	Continuous Printing
Status Information	2	1 Page
Test A	3	Continuous Printing
Nozzle Test	4	1 Page

- When you release the **POWER** button, the test page starts to print.

***All self-test prints require Letter or A4 size paper. Using a smallersize paper for a self-test print will result in parts of the printoutbeing printed directly on the platen.**

All self-test prints are printed in accordance with the current printing settings (font, printing mode, etc.)

***Red- Information for technician not included in the user manual**

Cleaning the Print Head

Your printer is equipped with a print head cleaning function to ensure constant high quality printing.

Cleaning the Print Head From Windows

If you are using Windows, you can execute print head cleaning from the Control sheet in the printer driver. Simply click on **Clean Ink Head.**

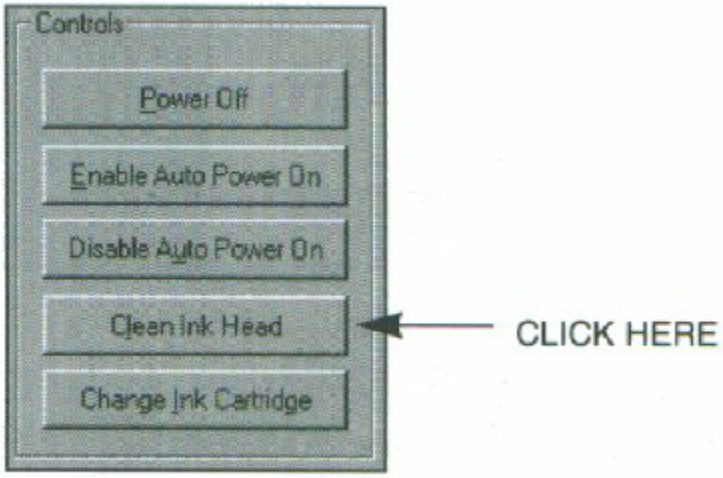

Cleaning the Print Head Using the Operators Panel

If you want to clean the print head from the operator panel, follow these steps:

1

Make sure the printer is turned on.

- Make sure the green POWER light is on.

2

Press and hold the RESUME button for at least two seconds until the printer beeps twice.

- The POWER light will blink for several seconds while the print head is being cleaned.

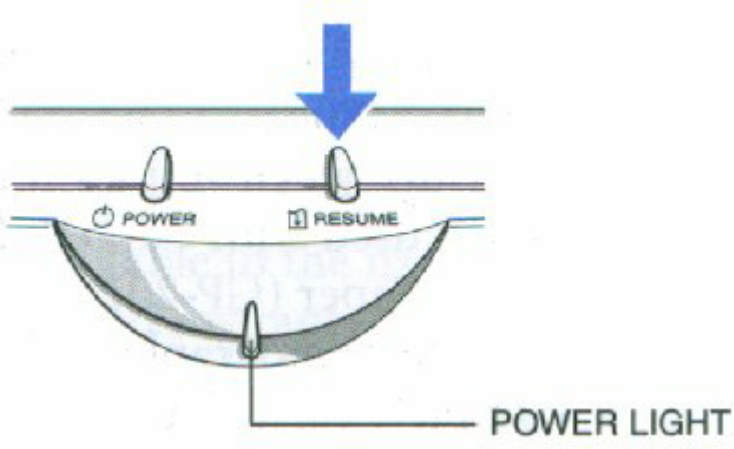

- Perform the print head cleaning only when you encounter a print quality problem. Unnecessary and repetitious cleaning will waste ink.
- If you execute the print head cleaning while paper is manually loaded, the printer will eject the paper and then perform the cleaning.

BJ Cartridge Guidelines

You can use these cartridges with the printer:

- BC-21e Color BJ Cartridge
  Contains the print head unit and two replaceable BJ tanks-the BCI-21 Color BJ Tank contains color ink (cyan, magenta, yellow) and the BCI-21 Black BJ Tank contains black ink. You can replace the BJ tanks without replacing the print head unit when you run out of ink.

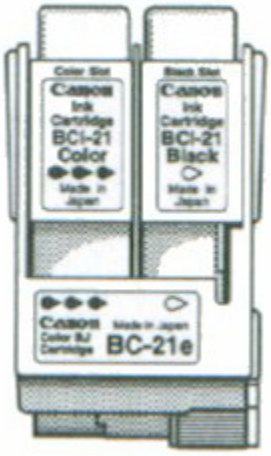

- BC-20 Black BJ Cartridge
  Contains the print head unit and black ink only. Use this cartridge when you will be printing with black ink only. When you run out of ink, you replace the complete cartridge.

- BC-22e Photo BJ Cartridge

Contains the print head unit and color and black inks. Use this cartridge when oyu want to produce photo-realistic color printing. When used with Canon's High Resolution Paper (HR-101) or Glossy Photo Paper (GP-201), this ink produces images comparable to your favorite photographs. When you run out ink, you replace the complete cartridge.

- BC-29 Neon BJ Cartridge
  Contains the print head unit and neon color and black inks. Use this cartridge when you want to add hot new colors to everything from your business graphs to stickers for your kids. These amazing bright fluorescent colors make your pictures, graphs, and fun images really stand out. When you run out ink, you replace the complete cartridge.

The actual amount of ink that you use will vary depending on the print density of a page. If the majority of your output is graphics, you may need to change cartridges or tanks more often than when you are printing text only. See Appendix A, Specifications, for details on the life expectancy of the BJ cartridges.

You may need to replace the BJ cartridge or a BJ tank when any of the following conditions exist:

- You have been using the cartridge for over one year.
- Your printed output is not crisp and clear, and there are gaps in the characters (missing dots) even after you have cleaned the print head at least five times.

If you are using the BC-21e Color BJ Cartridge and your output is blank, one of the BJ tanks is probably out of ink. See the instructions starting on page 4-18 for replacing a BJ tank.

Canon has more engineers dedicated to creating quality ink for providing the best results for output on Bubble Jet printers than any other organization. Canon does not prohibit the use of third-party inks and the use of third-party inks does not invalidate the product's limited warranty. However, Canon cannot guarantee the quality or performance of your printer when you are using inks from other suppliers.

Canon's limited warranty does not cover damage caused to Canon's Bubble Jet products that is attributable to the use of third-party parts or supplies, including inks. The limited warranty remains in effect for its life once that particular damage has been properly repaired.

For optimum printing results, Canon recommends that you use only Canon BJ cartridges.

BJ Cartridge and BJ Tank Maintenance

The most important thing you can do to extend the life of your printer and to ensure optimum print quality is to take care of the BJ cartridges.

Caution

Spilled ink can stain any surface. Open BJ cartridges carefully, and follow the guidelines presented here to protect against spilled ink.

- If you are using both the BC-21e Color BJ Cartridge and any other BJ cartridges, make sure you store the cartridge not being used in the ink Cartridge Storage Box.
- Keep BJ cartridges and BJ tanks in their sealed containers until you are ready to use them.
- Do not remove the BJ tanks from the BC-21e Color BJ Cartridge unnecessarily. This may cause the ink to clog.
- Make sure both BJ tanks are installed in the BC-21e Color BJ Cartridge with one BJ tank only may cause ink clogging.
- If spilled, the ink is difficult to remove. Therefore, it's a good idea to keep the BJ cartridges and BJ tanks out of reach of children.
- Do not touch the print head area on the BJ cartridge. Ink may leak out and cause stains.

Caution

Hold the BJ cartridge on the sides only. Do not touch the silver plate on the bottom of the BJ cartridge or the silver metal or circuit area on the side. The metal area may become hot during printing.

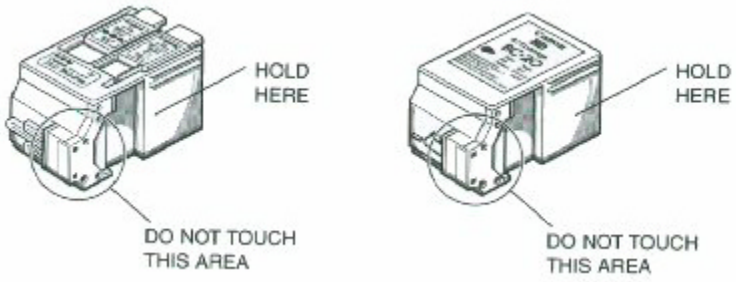

Replacing the BJ Cartridge

The following procedure describes how to replace the BC-21e Color BJ Cartridge with the BC-20 Black BJ Cartridge. Follow the instructions in this section to replace an old BJ cartridge or to change BJ cartridges when you are switching between the BC-21e and any of the other BJ cartridges.

You only need to replace the BC-21e Color BJ Cartridge when the print head is damaged (or after printing approximately 2000 pages). If one of the BJ tanks (either color or black) in your BC-21e Color BJ Cartridge is out of ink, see the next section (page 4-18) for instructions on how to replace a BJ tank.

Note

You may replace the BJ tanks in the BC-21e Color BJ cartridge as many as 20 times (or more) before you need to replace the BJ cartridge.

Before starting, make sure the printer's power is on.

1

Open the front cover.

- Use both hands to grasp the sides of the cover and pull it toward you.

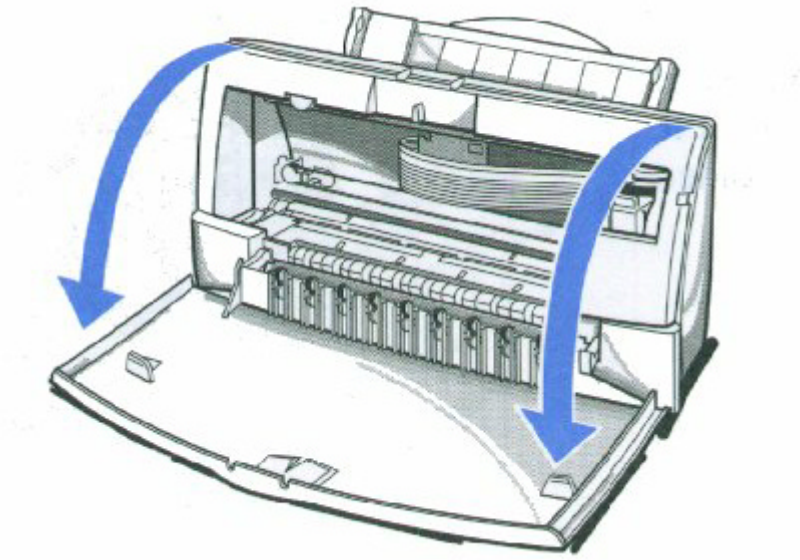

2

Press the CARTRIDGE button once.

- The printer beeps and moves the cartridge holder to the center of the printer.
- The POWER light blinks while the cartridge holder is positioned in the center of the printer.

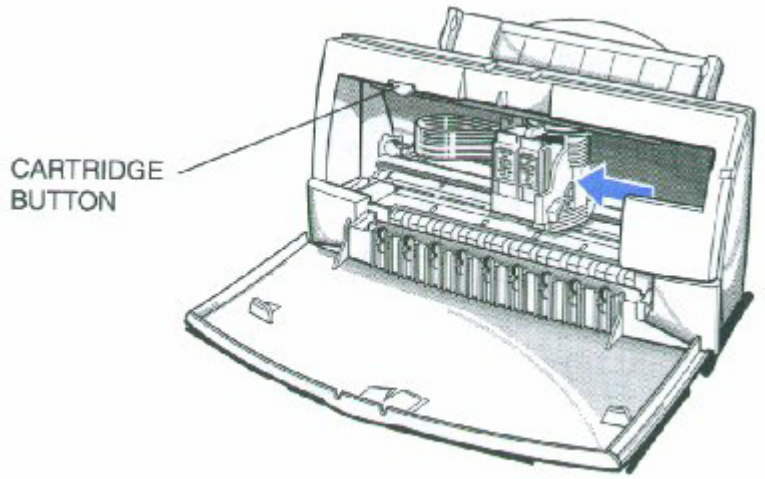

Note

Do not attempt to move the cartridge holder manually. This may damage the printer.

3

Lift the green lock lever on the cartridge holder.

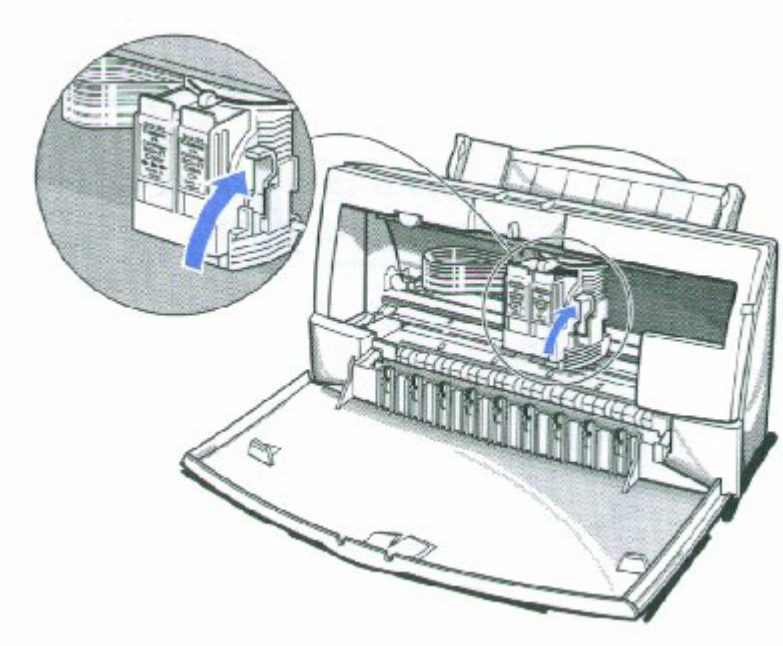

4

Slide the BJ cartridge out of the holder.

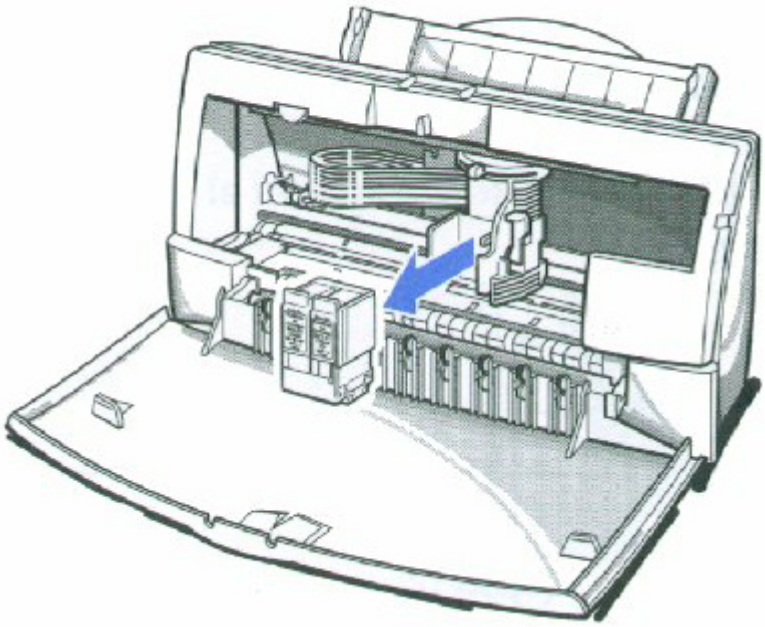

5

Store or dispose of the BJ cartridge.

- If you are replacing an old BJ cartridge, dispose of the old cartridge properly.
- If you are switching cartridges, you must store the cartridge you are removing in the Ink Cartridge Storage Box.

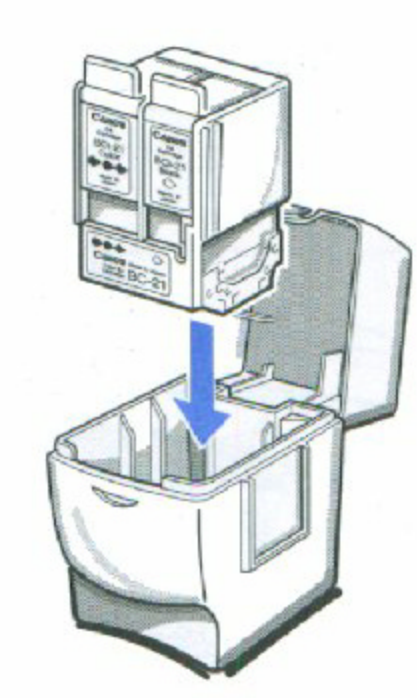

6

Take the new BJ cartridge out of its protective packaging.

- Peel off the protective foil.

7

Remove the protective material from the BJ cartridge.

- Lift off the cap from the print head and then remove the tape.

8

Slide the BJ cartridge straight into the cartridge holder.

- Be careful not to touch the rollers with the print head.
- Make sure the cartridge is pressed against the back of the holder.

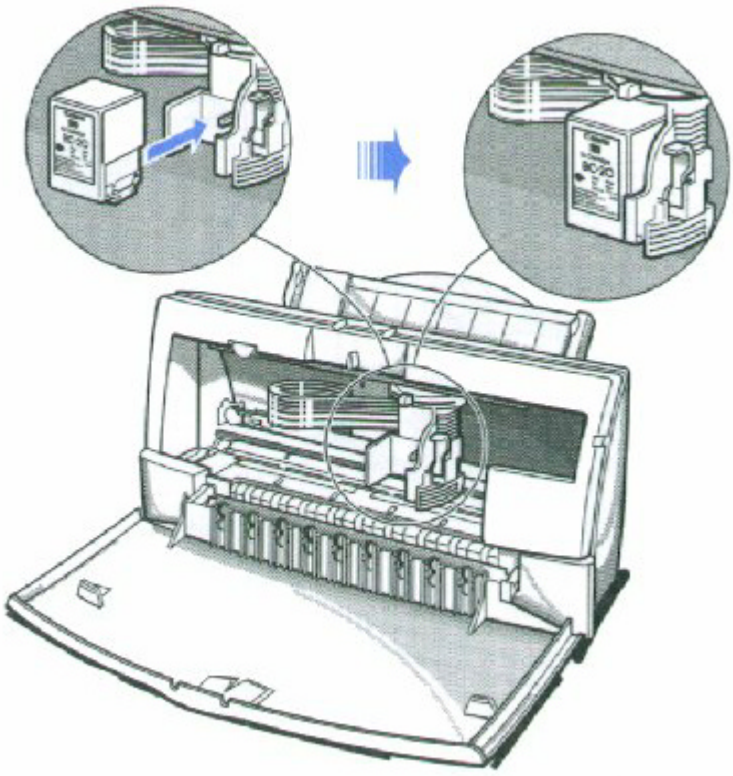

9

Press the lock lever down completely; do not use excessive force.

- Make sure the marks on the lever and the cartridge holder align.
- The BJ cartridge is now positioned and locked.

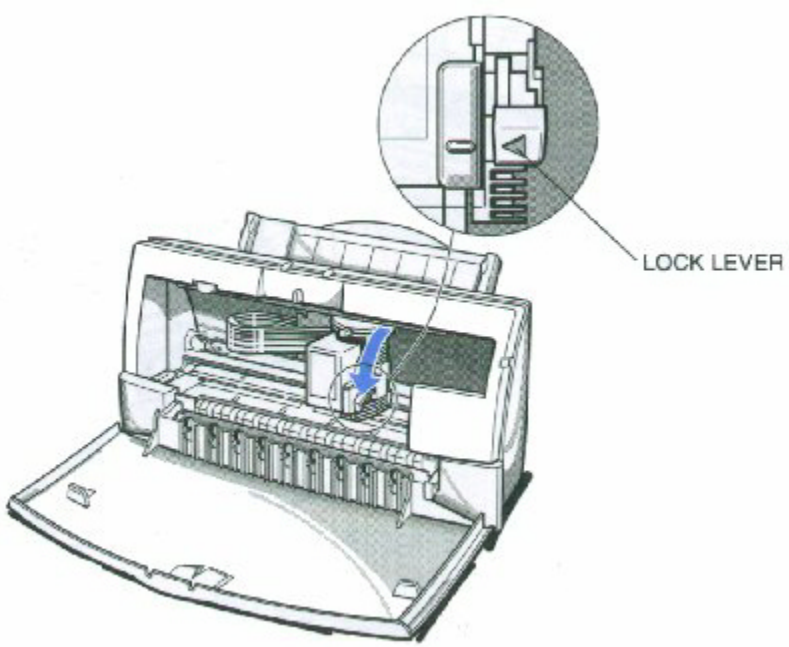

Caution

Do not manually move the mechanism that houses the BJ cartridge. Attempting to move the BJ cartridge holder will damage the printer.

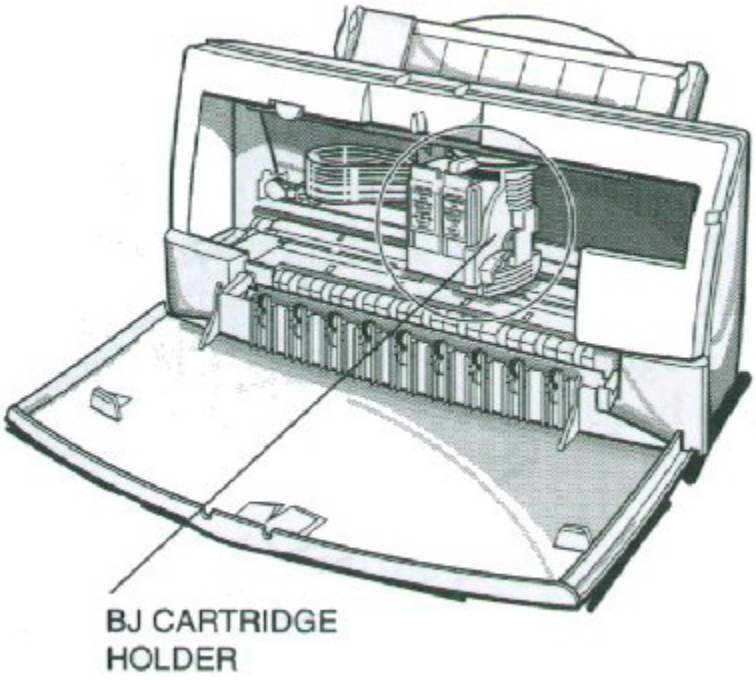

Set the paper thickness lever.

- If you installed the BC-20 Black BJ Cartridge, set the paper thickness lever to the left.

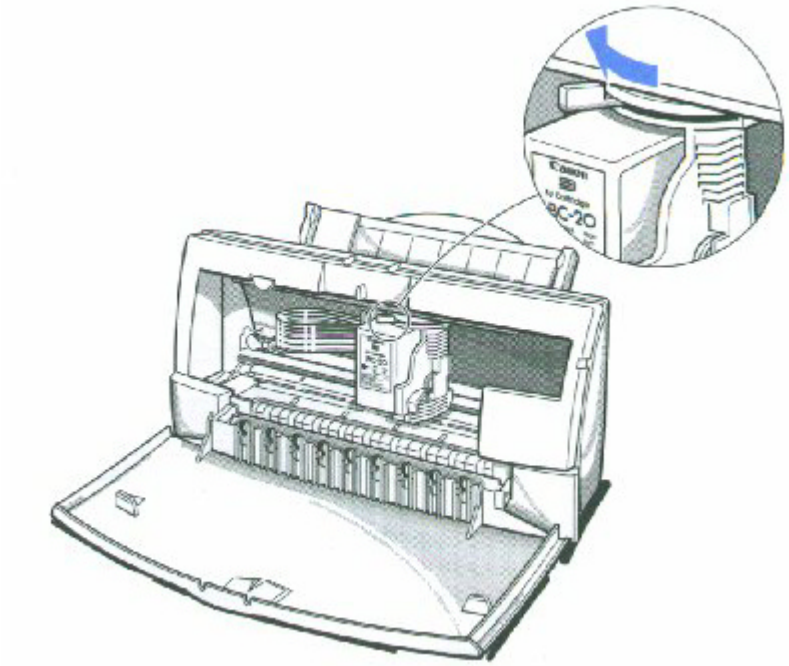

- If you installed the BC-21e Color BJ Cartridge, set the paper thickness lever to the center.

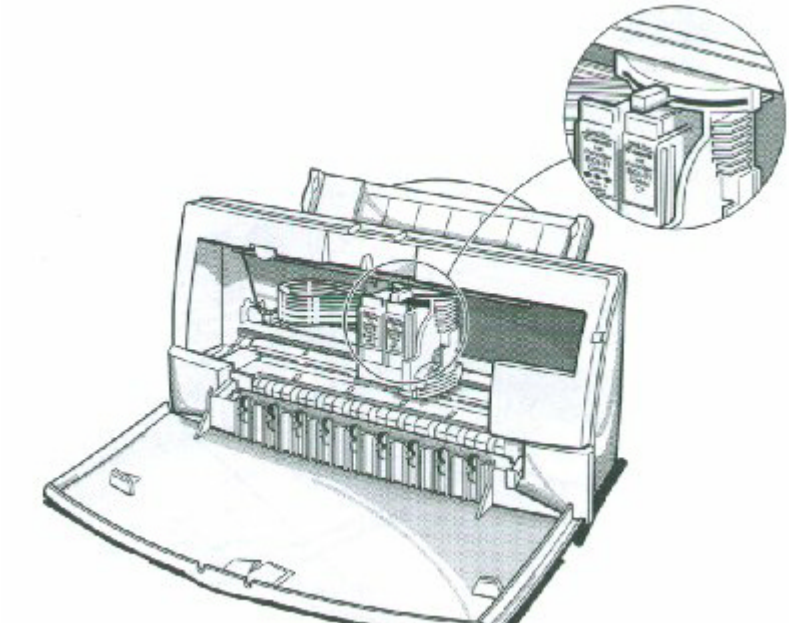

11

Press the CARTRIDGE button.

- The printer beeps and moves the cartridge holder to the home position on the right side of the printer.
- The printer cleans the print head automatically.

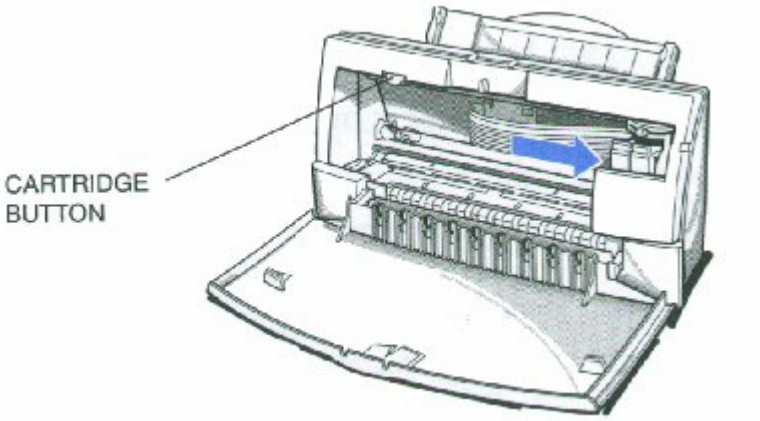

12

Close the front cover.

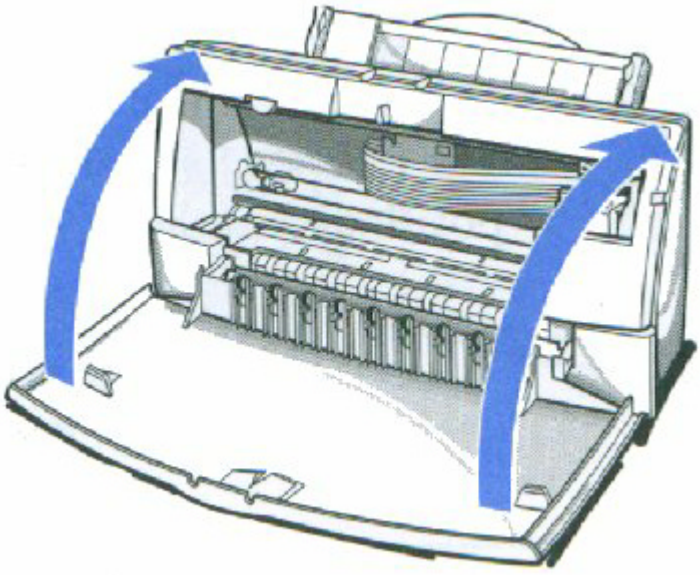

Whenever you turn off the printer, the BJ cartridge moves to the home position on the right and caps itself. If you unplug the printer while it is printing (or if you turn off a power strip to which the printer is connected), or if you manually move the cartridge holder from the home position, the BJ cartridge will not be capped and it may dry out.

If you installed a new BJ cartridge, the printer automatically cleans the print head. If you need to initiate the print head cleaning, see page 4-6.

Replacing a BJ Tank in the BC-21e Color BJ Cartridge

If you perform a print operation correctly but the output is blank, a BJ tank may be out of ink. Perform the print head cleaning at least five times. If the output is still blank, replace the empty BJ tank in the BC-21e Color BJ Cartridge.

Leave the BJ cartridge in the printer when replacing a BJ tank. Make sure the printer's power is on.

1

Open the front cover.

- Use both hands to grasp the sides of the cover and pull it forward.

2

Press the CARTRIDGE button once.

- The printer beeps and moves the cartridge holder to the center of the printer.
- The POWER light blinks while the cartridge holder is positioned to the center of the printer.

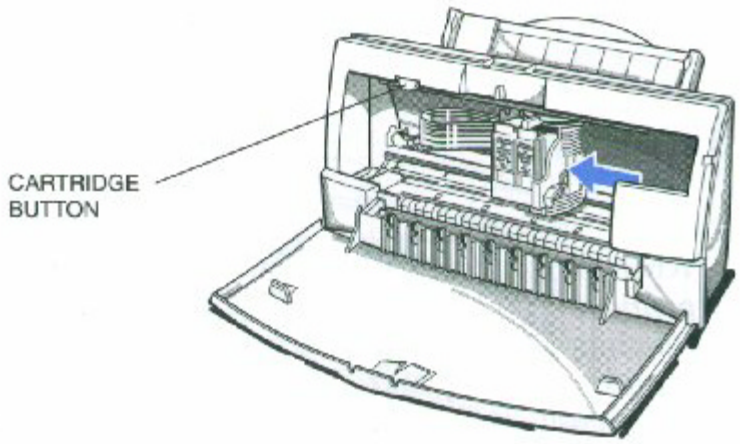

3

Remove the empty BJ tank.

- The color BJ tank is on the left; the black BJ tank is on the right.
- Grasp the tab on the tank and pull forward to release the BJ tank.
- Then lift the BJ tank up and out of the BJ cartridge unit.
- Dispose of the BJ tank properly. You may want to place it in a plastic bag to keep from spilling any residual ink.

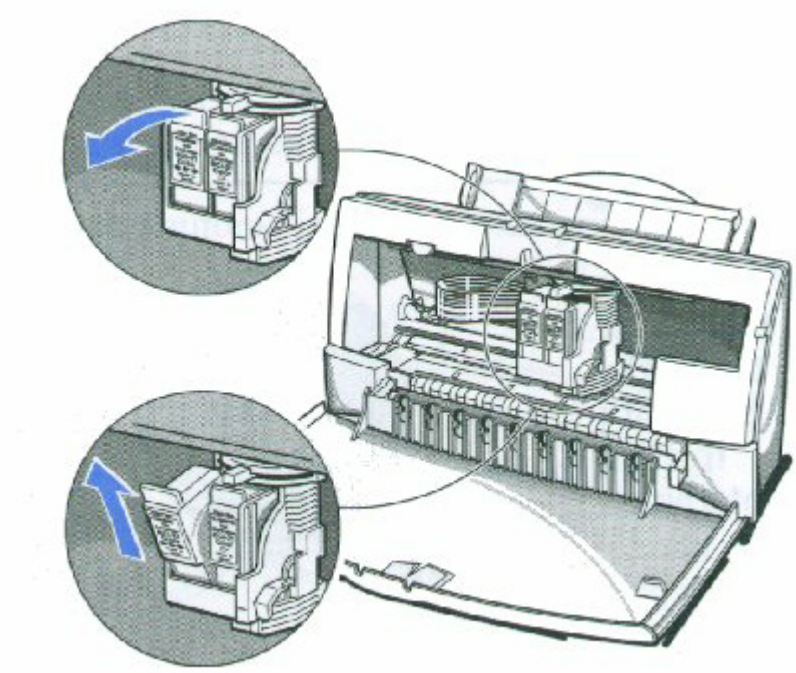

4

Take the new BJ tank out of its packaging.

- Then remove the protective cap.

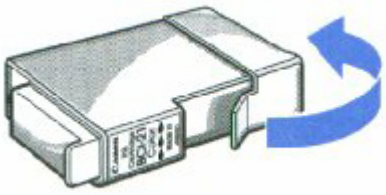

5

Slide the new BJ tank into the empty slot on the BJ cartridge.

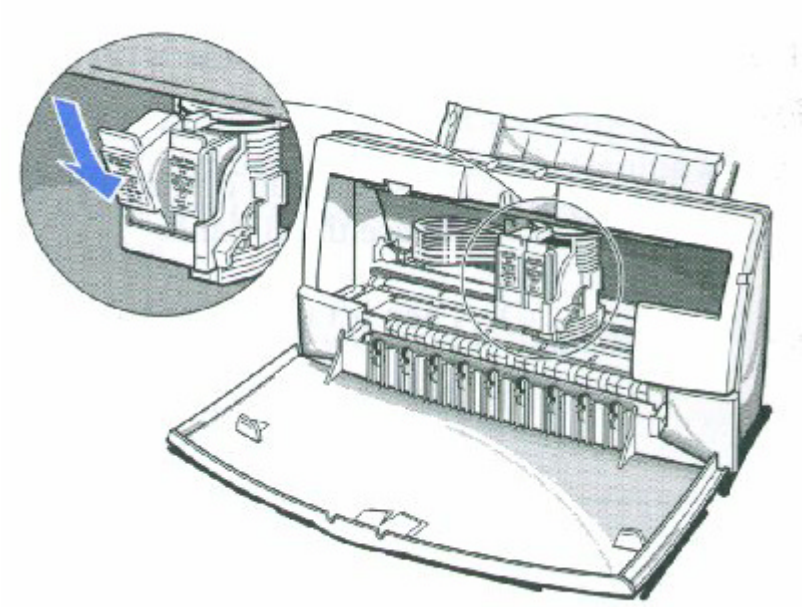

6

Press firmly on the tab on the top of the BJ tank until it snaps into place.

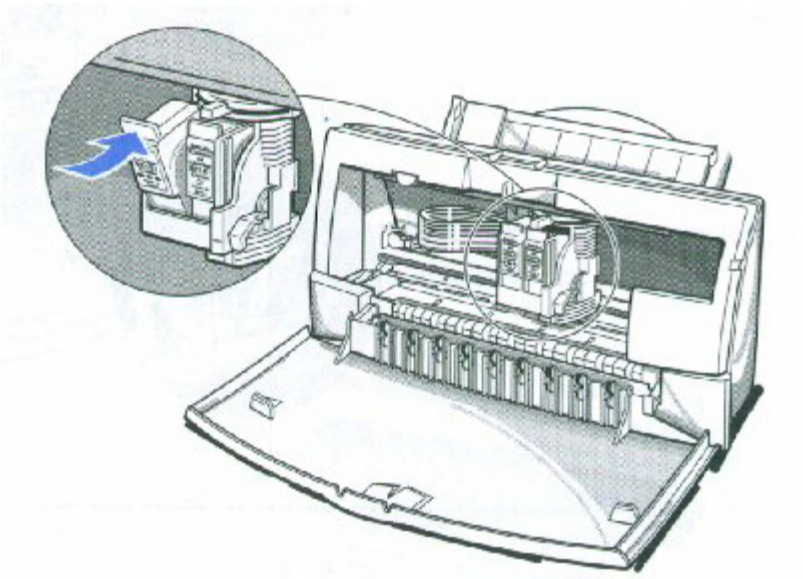

7

Make sure each BJ tank is correctly seated in its respective slot.

- If you are replacing both tanks, repeat steps 3 through 6 for the other BJ tank.

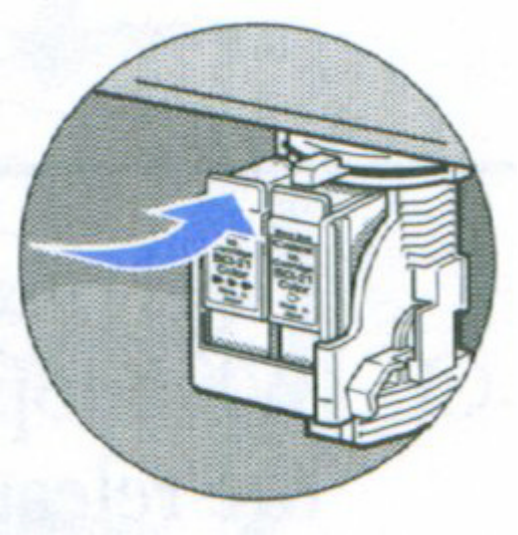

8

Press the Cartridge button.

- The printer beeps and moves the cartridge holder to the home position on the right of the printer.
- The printer automatically cleans the print head unit.

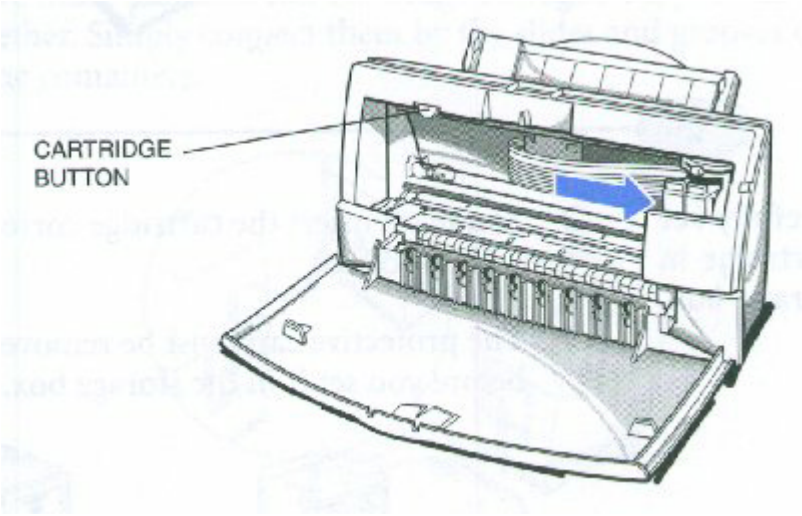

9

Close the printer's front cover.

- Use both hands to lift the cover into place and press firmly to close it.

Storing a BJ Cartridge

Whenever you unwrap a BJ cartridge, you must either install it in the printer or store it in the Ink Cartridge Storage Box to prevent the print head from drying and clogging.

1

Open the Ink Cartridge Storage Box

- When opening the Ink Cartridge Storage Box, press in on the release tab that locks the cover in place.

2

Carefully set the cartridge in the storage box.

- You must insert the cartridge correctly or the storage box will not close.
- The protective cap must be removed from the cartridge before you set it in the storage box.

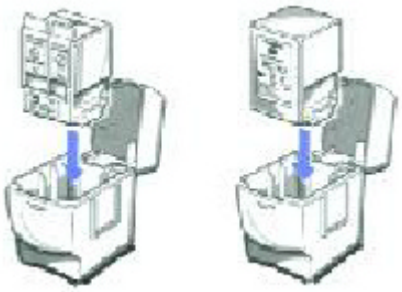

3

Close the storage box.

- Be sure the lids snaps closed.

Note

Whenever you remove a BJ cartridge from the printer, store the cartridge in the storage box (unless you are disposing of it).

If you have more than one Ink Cartridge Storage Box, you can hook them together. Simply connect them by the slides and grooves on the sides of the container.

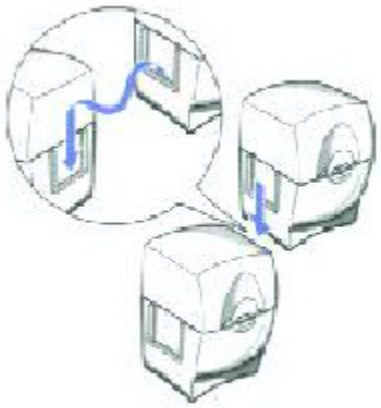

Installing and Removing the Optional Color Image Scanner Cartridge

You can easily convert your printer into a color scanner by installing the optional IS-22 Color Image Scanner Cartridge. This section describes how to install and remove the Color Image Scanner Cartridge. For details on operating the printer as a scanner, see the *IS-22 Color Image Scanner Cartridge User's Manual* that comes with the scanner cartridge.

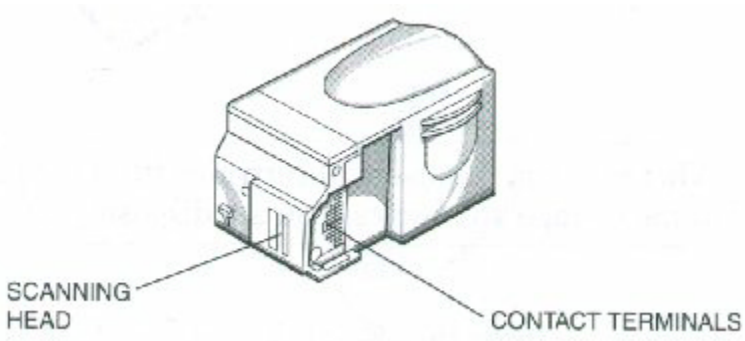

Do not touch the contact terminals or the scanning head.

Installing the Color Image Scanner Cartridge

1

Remove the BJ Cartridge.

- Open the front cover and press the CARTRIDGE button. The printer beeps once, the POWER light starts flashing, and the cartridge holder moves to the center of the printer.
- Lift the green lock lever.
- Slide the BJ cartridge out of the cartridge holder.
- Store the BJ cartridge in an Ink Cartridge Storage Box (see page 4-22 for details).

2

Remove the scanner cartridge from its packaging.

- Handle the scanner cartridge carefully.
- Do not touch the scanning head area.

3

Insert the scanner Cartridge.

- Hold the scanner cartridge by the ridges on either side of the cartridge.
- Match the groove on the scanner cartridge with the guide on the cartridge holder.
- Slide the scanner cartridge into the holder and hold it in position.

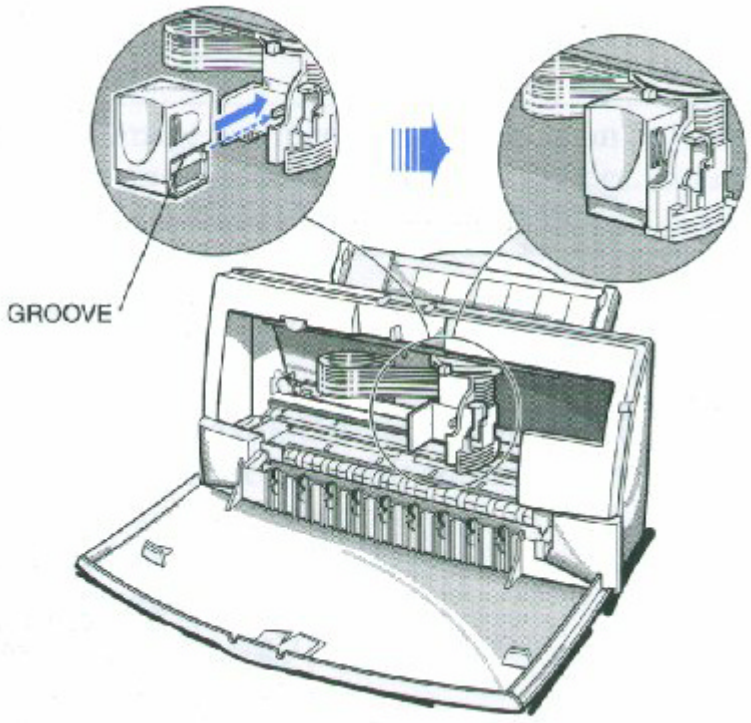

4

Lower the lock lever.

- Slowly press the lock lever down completely until the mark on the lever is aligned with the mark on the cartridge holder.

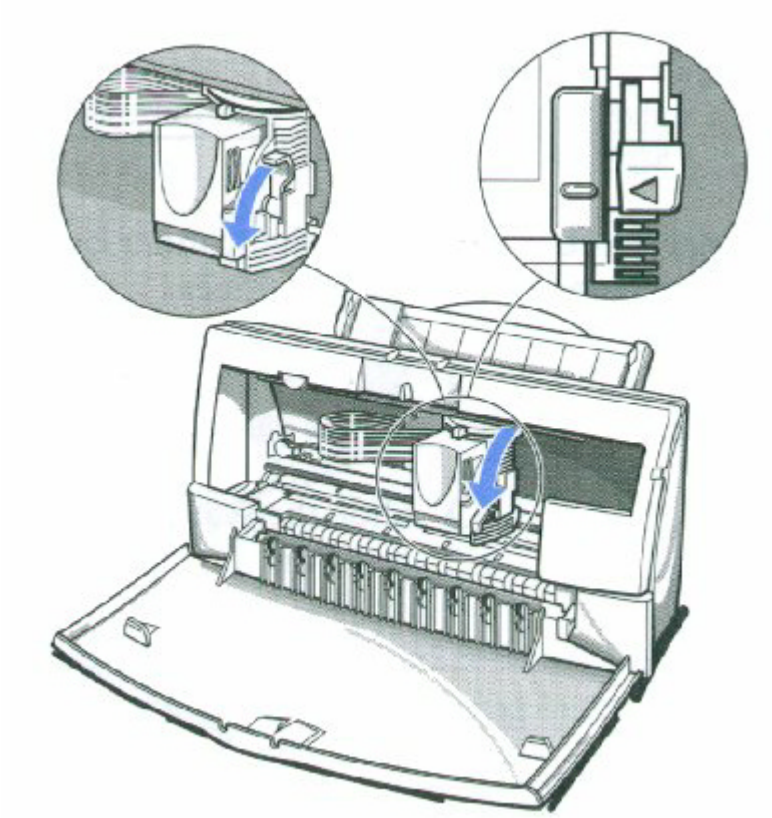

5

Set the paper thickness lever to the center.

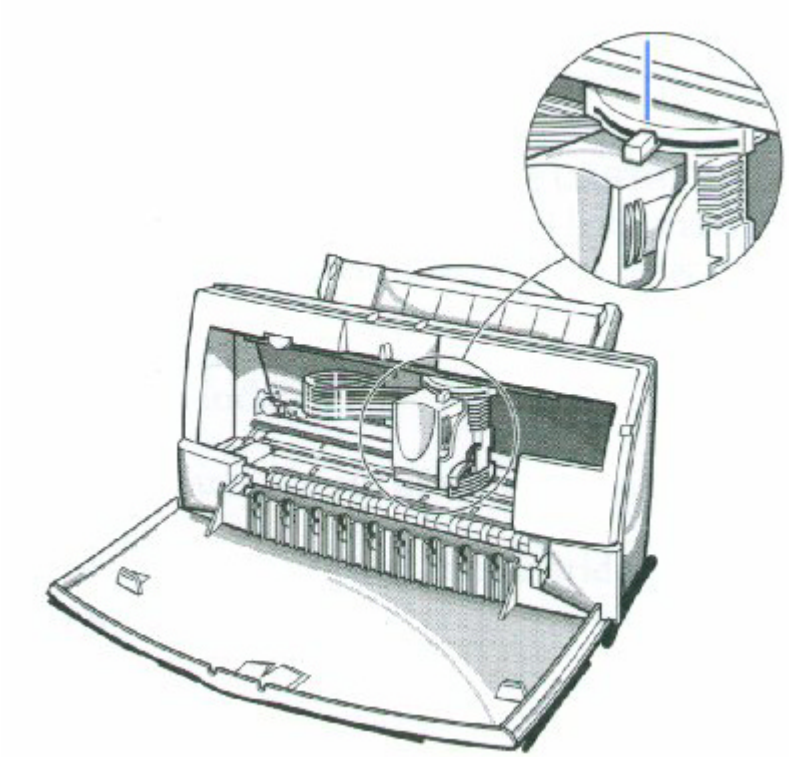

6

Press the CARTRIDGE button once and close the front cover.

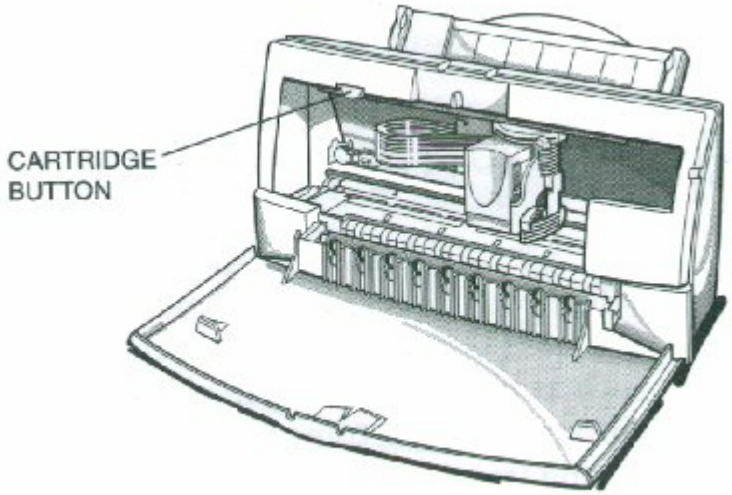

Removing the Color Image Scanner Cartridge

Caution

Always remove the Color Image Scanner Cartridge as soon as you are finished scanning pictures and replace it with a BJ cartridge. Do not leave the Color Image Scanner Cartridge in the printer.

Remove the scanner cartridge just as you would a BJ cartridge. (See step 1 on page 4-24 for details.)

Store the scanner cartridge in the Ink Cartridge Storage Box provided with the cartridge. You may want to label this container. Only store the Color Image Scanner Cartridge in this storage box.

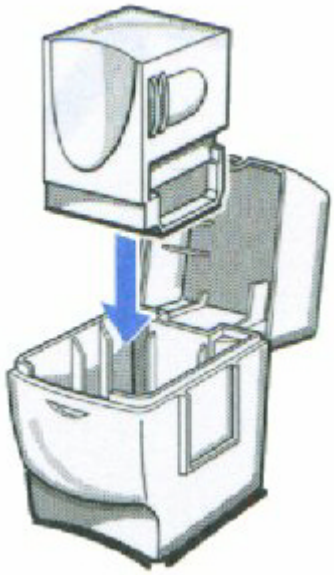

Caution

Never store the IS-22 Color Image Scanner Cartridge in an Ink Cartridge Storage Box that has been used for a BJ cartridge. The pad in the storage box where the head of a BJ cartridge rests is covered with ink that will damage the scanning head of the IS-22 Color Image Scanner Cartridge.

Be sure to replace the BJ Cartridge.

Transporting the Printer

Note

While your printer is small and compact, it is not a portable printer and need to take care when transporting it. The printer's components, such as the sheet feeder, may become damaged if subjected to severe vibration during transportation. Also, your print head may dry out during travel (and become unusable) if it is not capped and taped correctly.

If you plan to move the printer from one location to another, or if you want to store it, follow these steps.

1

Turn off the printer's power.

- Make sure the print head is in the home position.
- Remove any paper from the sheet feeder.
- Detach the interface cable.
- Do not remove the AC adapter.

2

Open the front cover.

- Tape the BJ cartridge to the side of the printer.

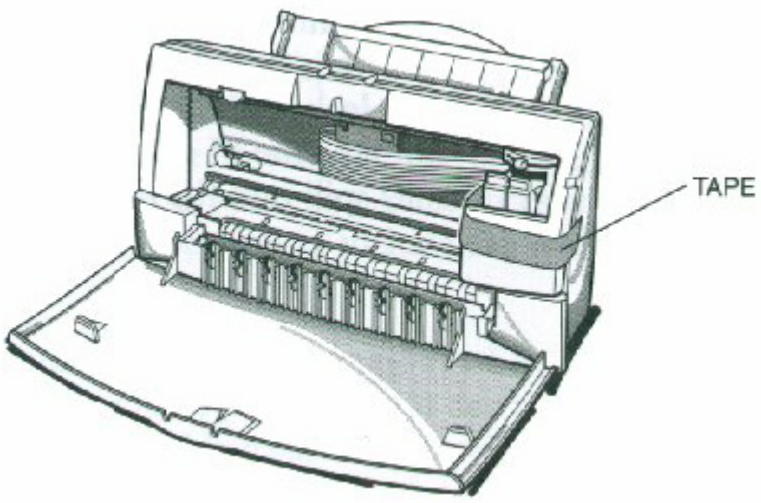

3

Close the front cover.

- Return the paper support and paper output tray to their original positions.

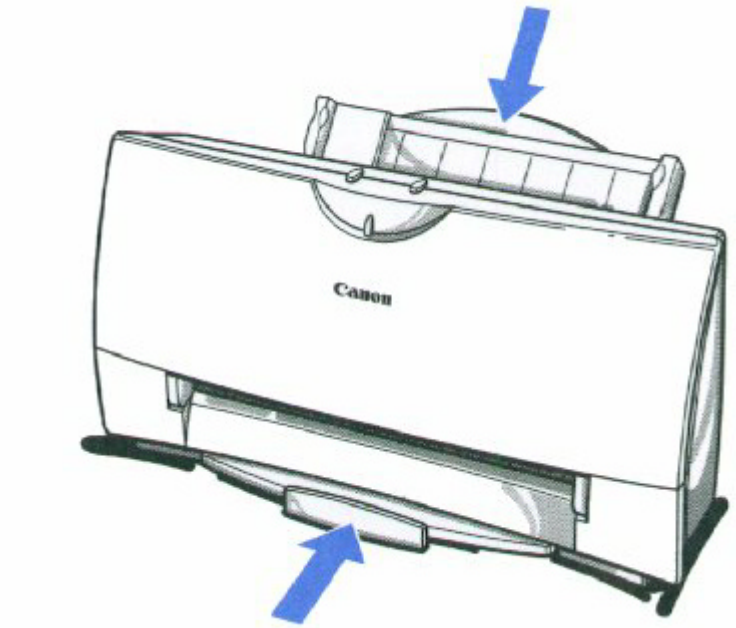

4300 Chapter 4 Page 29

4

Repack the printer in its original packing materials.

- **Do not remove the BJ cartridge from the printer or ship a BJ cartridge or an ink tank from which you have removed the protective cap.** An opened BJ cartridge or BJ tank that is not installed in the printer may leak, and the print head may dry out. Also, if you do not tape the BJ cartridge to the side of the printer, ink may spill into the printer.

4300 Chapter 4 Page 30

Troubleshooting

Due to today's rapidly changing personal computer environment, we have placed troubleshooting information in a variety of places to ensure that the most accurate information possible is available. The best place to find current information is through our on-line support services and through our Fax Retrieval System. On-line services include the World Wide Web and our BBS.

This chapter contains very basic information to help you solve printer problems. It covers a few basic problems and describes how to clear a paper jam. For complete problem solving information, be sure to use our other support services.

See *Getting Help From Canon* in Chapter 1 (page 1-5) for details on Canon's customer technical support options.

Identifying Your Printer Problem

Before contacting Canon, identify your printer problem and make sure you have the following information.

- Product Name
- Serial Number
- Place of Purchase
- Nature of Problem
- Steps you have taken to solve the problem and the results

The serial number is located on the label on the back of the printer:

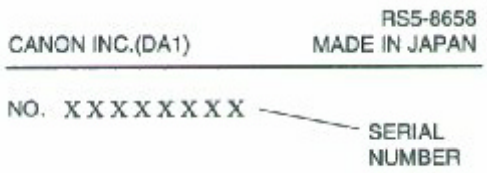

Note

Attempting to repair the printer yourself may void the limited warranty as to that repair. See the limited warranty information that came with your printer for details.

General Problems

The most basic problems you may encounter are "the printer does not print" and " your print quality is not satisfactory"

- **If the printer does not print**
  - Check all your cable connections
  - Check your printer driver setup
  - Check your computer configuration
  - Check your BJ cartridge
- I**f your print quality is not satisfactory**
  - Check your printer driver settings
  - Clean the print head
  - Clean the print head five times
  - Replace the BJ cartridge
  - Check the type of paper you are using
- **If colors are missing**
  - Perform a Nozzle Test (see page 4-5)
  - Clean the print head (see page 4-6)
  - If necessary, replace the BJ cartridge (see page 4-10)
- **If you want to print from an MS-DOS application that does not have a selection for your printer**
  - Select the Epson LQ-2550 or the IBM Proprinter X24E

Clearing Paper Jams

When a paper jam occurs, the POWER light turns orange and the printer goes off-line.

1

Turn off the printer.

- Press the **POWER** button

2

Remove the jammed paper.

- Gently pull the paper out with one hand while holding down the printer with the other hand.
- If the paper tears off inside the printer, open the front cover and remove the paper left inside the printer.

3

Turn the printer on.

- Press the **POWER** button to turn the printer back on.
- The POWER light comes on and the print head moves to the home position.
- The printer is now ready for printing.

If you are printing high density graphics when a paper jam occurs, feed at least two sheets of paper through the printer to clean the rollers.

Technical Notes

Compaq Presario 7170/7180

Problem
A [k prints at the top of the page when printing from Windows 95 on a Compaq Presario 7170/7180

Cause
Configuration of parallel port in CMOS

Solution
Change CMOS on Compaq Presario 7170/7180 to enable bi-directional capability

- Reboot computer, press "delete" to go into CMOS setup
- At setup menu, cursor to "Advanced System Setup" and "Enter" to select
- From Advanced System Setup menu, select "Integrated Peripherals"
- From the Integrated Peripherals Menu, Cursor to 'LPT Extended Mode" (Note: This is different than LPT1 mode)
- The LPT Extended Mode will probably show "Standard"- Use the "Page Down" key to cycle to "ECP Mode"
- Press "ESC" key to back to Advanced System Setup Menu
- Press "ESC" key to go back to main setup menu
- Press "F10" to save new configuration, and confirm save by answering "Yes" to final question

Toshiba Laptop

Problem
A[K prints at the top of the page and/or partial printout when printing on a Toshiba laptop.

Cause
Configuration of parallel port in CMOS and LPT.VXD file.

Case #1 Partial printout may occur with the following settings:
CMOS value for LPT1 is ECP LPT.VXD v4.00.950 file size 35,479

Case #2 [K is printed at top and the rest of the page is correct with the following settings:
CMOS value for LPT1 is Standard Bi-Directional LPT.VXD v4.00.950 file size 35,487.

Solution
This corrected configuration should provide correct output. CMOS value for LPT1 is Standard Bi-directional LPT.VXD v4.00.503 file size 35,487.

The LPT.VXD file is located in the Windows/System directory. The LPT.VXD file will be available from the Microsoft Web page.

To change the CMOS settings:

- From Windows 95, click on Start
- Go to Programs
- Select Toshiba Utilities

You will have either TSETUP or HARDWARE SETUP UTILITY

For TSETUP Select Hardware Options

- Select Parallel/ Printer
- Select Standard bi-directional
- Click OK
- The computer will ask if you want to reboot-Select Yes

On both utilities you will have to save and reboot the system.

Note that selecting standard Bi-directional changes the CMOS setting to bi-directional.

Compaq Presario

Problem
A Compaq Presario running windows 95 will print only 3/4 page out of any Windows application.

Cause
This occurs with Windows 95, Windows 3.1, and Win95 minidrivers.

Solution
Change the Resource Setting of LPT1.

- Right Click on My Computer
- Select Properties
- Select Device Manager Tab
- Double-click Ports (COM & LPT)
- Double-click LPT1
- Select Resources Tab
- De-Select Automatic Settings
- Change Basic Config from 0000 (0) to 0003 (3)
    - This step may require setting to 0002 (2) first, and then reboot in order to see 0003 (3)
    - New systems may go up to 9; use the setting for IRQ7 no DMA
- Select OK

The above solution has found to be successful on some machines. If unsuccessful, then try the following procedure forwarded from Compaq Tech Support.

- Go to Control Panel
- System
- Device Manager
- Click "+" in Front of Port
- Highlight ECP Printer Port
- Properties
- Driver
- Change Driver....
- Show all Devices
- Printer Port
- Click **OK**
- Click **OK**
- Close
- Reboot

If these suggestions do not solve the problem, you need to call Canon (see page 1-5 for details).

Specifications

Printing Specifications

Printing Method
Bubble Jet ink on demand

Paper Handling
Automatic feed
Manual feed

Sheet Feeder Capacity -- Auto Feed Only

Maximum thickness of stacked paper: 0.4 inches (10 mm)

Plain Paper (20 lb or 75 g/m^2)	Approx. 100 sheets (0.4" stack)
Glossy photo paper	1 sheet
Banner paper	1 sheet (2 to 6 long)
High resolution paper	Approx. 80 sheets (0.4" stack)
T-shirt transfers	1 sheet
Bubble Jet paper	Approx. 100 sheets (0.4" stack)
Fabric sheets	1 sheet
Transparencies	50 sheets
Back print film	10 sheets
Envelopes	15 envelopes (U.S. Commercial number 10 or European DL)

Paper Size

Letter	8.5 in x 11 in
Legal	8.5 in x 14 in
A4	210 mm x 297 mm
A5	148 x 210 mm
B5	182 x 257 mm
Banner	8.5 in x 11 in sheets; maximum length 66 in (1676 mm)
U.S. Commercial number 10 envelope	9.5 in x 4.1 in
European DL envelope	220 mm x 110 mm

Paper Type	Recommended
Glossy photo paper	Canon Glossy Photo Paper GP-201
Banner paper	Canon Banner Paper
High resolution paper	Canon High Resolution Paper HR-101
T-shirt transfers	Canon T-Shirt Transfers TR-101
Greeting cards	Canon Greeting Cards GC-101
Bubble Jet paper	Canon Bubble Jet Paper (water-resistant) LC-301
Fabric sheets	Fabric Sheet FS-101 for Canon Bubble Jet printers
Transparencies	Canon CF-102 Transparencies
Back print film	Canon Back Print Film BF-102
High gloss film	Canon High Gloss Film HG-101
Envelopes	Commercial number 10 or European DL

Paper Weight

17 to 30 lb (64 to 105 g/m^2)

Print Speed

BC-21e Color BJ Cartridge	Draft mode -- up to 2.0 ppm Standard mode -- up to 1.4 ppm Fine mode -- up to 0.23 ppm
BC-20 Black BJ Cartridge	Draft mode -- up to 5 ppm Standard mode -- up to 3.6 ppm

Print Width

Maximum	8 inches

Line Feed Speed

Approximately 150 ms/line at 2/6-inch line feeds

Resolution

Color	720 x 360 dpi
Black	720 x 360 dpi (with Smoothing)

Printable Area -- Papers

The shaded portion in the following figure shows the printing area for paper. The table lists the minimum margins.

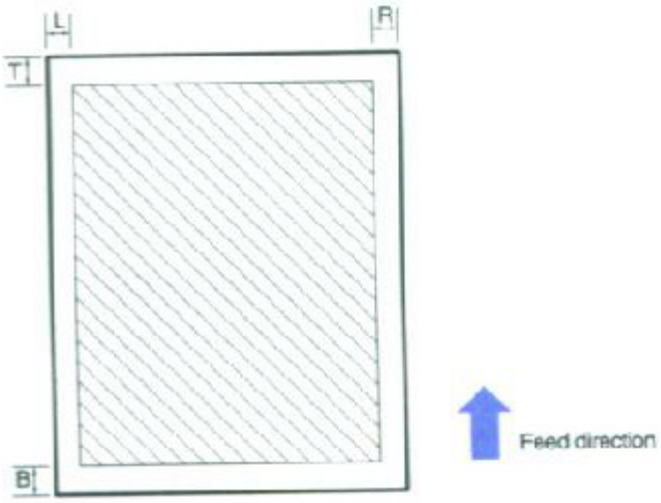

All except Fabric Sheet			Fabric Sheet		
Margin	**Inches**	**mm**	**Margin**	**Inches**	**mm**
L	0.25	6.4	L	0.25	6.4
R	0.25	6.4	R	1.35	34.4
T	0.12	3.0	T	1.62	41.1
B	0.65	16.5	B	1.10	27.9

Printable Area -- Envelopes
The shaded portion in the following figure shows the printing area for a COM10 envelope. The table lists the minimum margins.

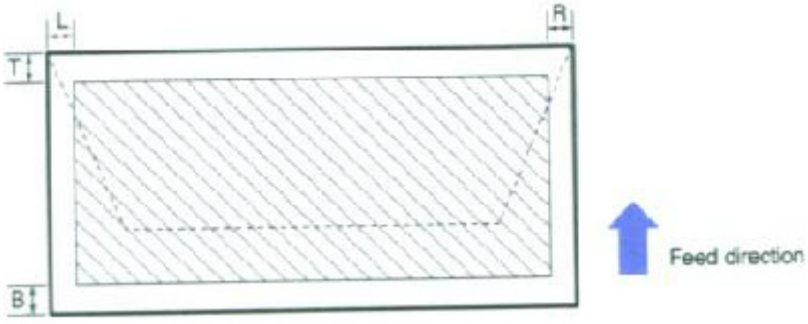

Margin	**Inches**	**mm**
L	0.25	6.4
R	1.25	31.7
T	0.12	3.0
B	0.65	16.5

BJ Cartridges

BC-21e Color BJ Cartridge

Print head	64 nozzles for black 24 nozzles for each color (cyan, magenta, yellow)
Print head life	Approximately 2,000 color pages at 30% coverage
BJ tanks	BCI-21 Color (cyan, magenta, yellow) BCI-21 Black
Ink color	Black, cyan, magenta, yellow
BJ tank yield	
BCI-21 Color	Approx. 100 pages at 7.5% coverage
BCI-21 Black	Approx. 225 pages at 5% coverage

BC-20 Black BJ Cartridge

Print head	128 nozzles
Ink color	Black
Cartridge yield	Approx. 900 test pages at 5% coverage

BC-22e Photo BJ Cartridge

Print head	64 nozzles for black 24 nozzles for color
Ink color	Black, cyan, magenta, yellow
Cartridge yield	Approximately 50 pages at 7.5% coverage for each color

General

Interface
IEEE 1284 compatible parallel interface

Acoustic Noise Level
Approx. 45 dB(A) per ISO 9296

Operating Environment

Temperature	41° F to 95° F (5° C to 35° C)
Humidity	10% to 90% RH (no condensation)

Storing Environment

Temperature	32° F to 95° F (0° C to 35° C)
Humidity	5% to 95% RH (no condensation)

Power Source

USA/Canada	AC 120 V 60 Hz

Power Consumption
4 watts maximum nonprinting
30 watts maximum printing

Dimensions
15.1 in (383 mm) W x 9.1 in (232 mm) D x 8.0 in (203 mm) H

Weight
Approx. 7.7 lb (3.5kg)

Optional IS-22 Color Image Scanner Cartridge

Paper Handling
Sheetfed

Resolution
360 dpi, 8 bit